RADIO CONTROLLED ELECTRIC POWERED OFF-ROAD RECREATIONAL VEHICLE

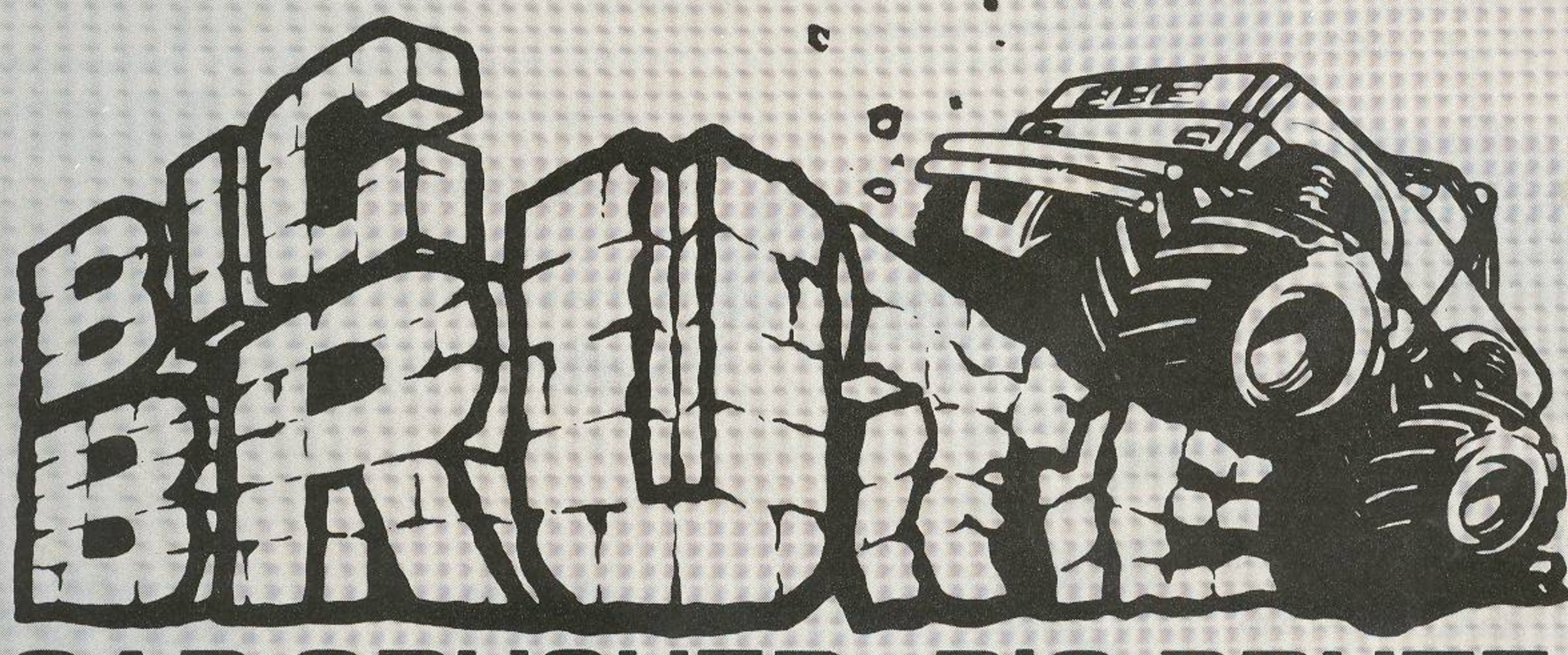

CAR CRUSHER BIG BRUTE

● CAR CRUSHER FUN IN MINIATURE! CLIMBS OVER HIGH OBSTACLES! ● SOPHISTICATED ALL-INDEPENDENT SUSPENSION FOR HIGH-SPEED STABILITY AND GOOD HANDLING. ● HUGE HIGH-GRIP RUBBER TIRES. STRONG ABS WHEELS. ● POWERFUL LeMANS "STOCK 05" MOTOR, 3-SPEED CONTROLLER INCLUDED. ● PROTECTIVE FRONT BUMPER AND MOTOR GUARD CAGE INCLUDED. ● REALISTIC TRUCK BODY. MANY DECORATIVE STICKERS AND FITTINGS. ● HIGH GROUND CLEARANCE. RUGGED ABS BOX-BEAM CHASSIS. ● EASY TO ASSEMBLE. SIMPLE ADJUSTMENT.

1:10 SCALE

BATTERY: 7.2V-1200mAh
RADIO: 2ch
(NOT INCLUDED)
MOTOR: LeMANS "STOCK 05"
(INCLUDED)

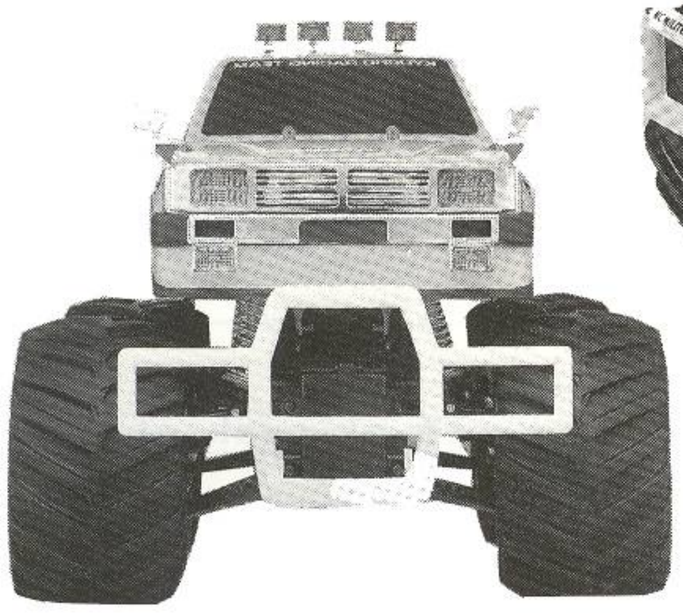

KYOSHO
THE FINEST RADIO CONTROL MODELS

KIT NO. 3105

RADI CONTROL SET

A 2 channel, 2 servo digital proportional radio control unit is required for driving this model car. A unit of such a radio can be used for any models with 2 channel control systems.

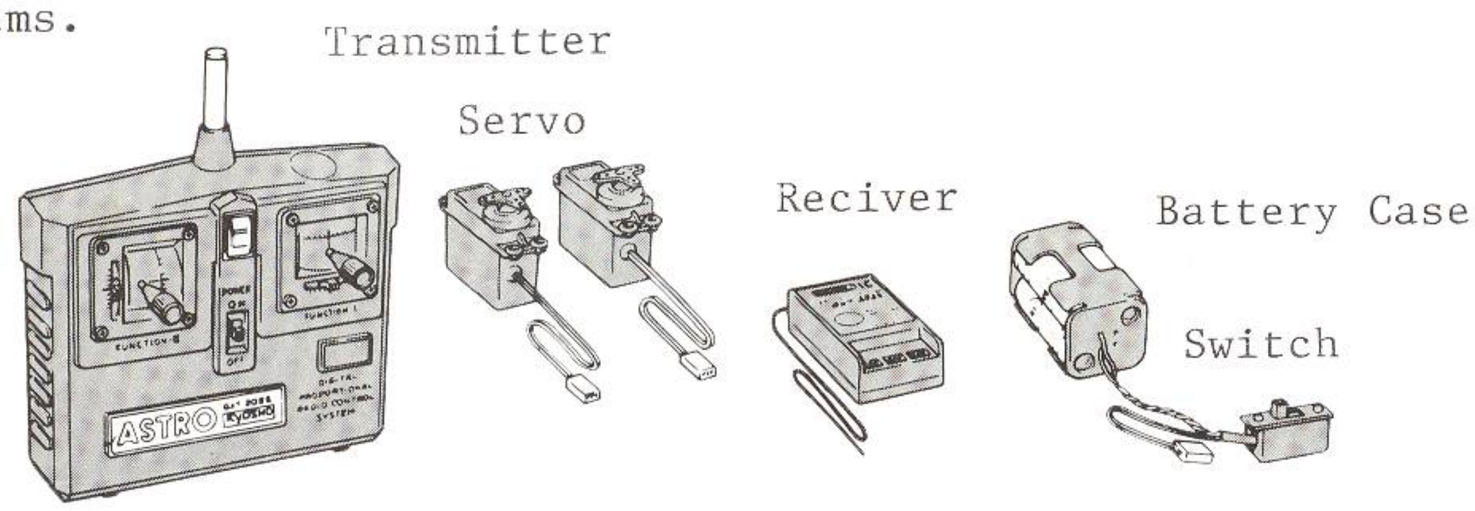

THINGS NEEDED BESIDES THE KIT

(2 Channel Radio System)

Two types of radio controlset are on the market, the stick type and the steering wheel type. Choose which ever you like.

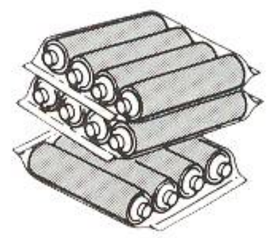

Battery for Radio

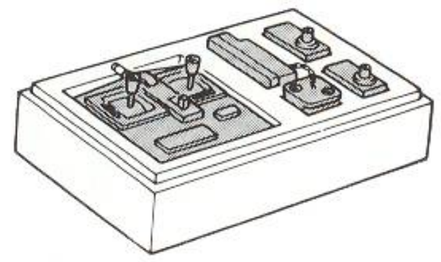

2 Channel Radio System

(Battery for Propelling the Car)

The "Ni-Cad Battery 7.2V Racing Battery and Power Battery" are ideal the purpose.

7.2 V Power Battery

7.2V Racing Battery

(Charger for Ni-Cad Battery)

The Kyosho's Ni-Cad Battery is of high performance. If it is charged correctly, it will operate for a considerable period of time. There are two ways of charging the battery; one is to charge a household 100V outlet, the other is through a quick charger powered by a car cigarette lighter or a 12V car battery. Use one of the chargers listed below which suits your need.

Model	Name	Charging Time	Charging Rate	Features
No. 2221	Super Ni-Cad Charger (AC100V)	14 to 16hrs.	100%	For biginners
No. 2326	7.2V Power Charger (DC12V)	15 minutes	about 70%	For biginners; timer built in
No. 1846	Multi Charger (DC12V)	20 minutes	100%	Timer, Ammeter built in
No. 1845	Lambda Quick Charger (DC12V)	about 20 minutes	100%	Trickle charging automatic cut-off at peak of charge
No. 2232	Super Ni-Cad AC Rapid Charger (AC100V)	about 40 minutes	about 80%	Chargable from Household outlet, Electronic Timer built in

No.2221

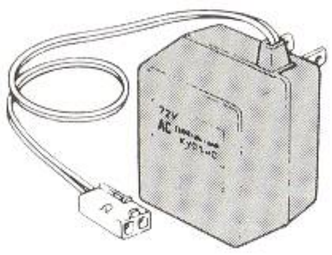

No.2326

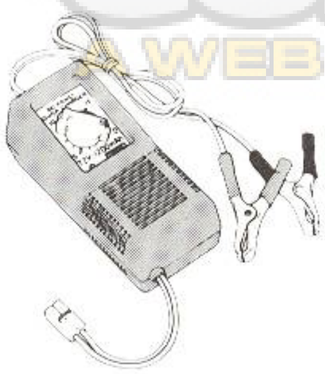

No.1846

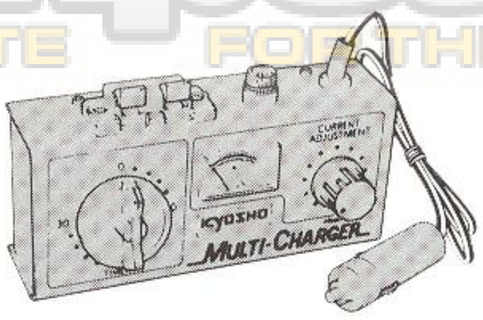

No.1845

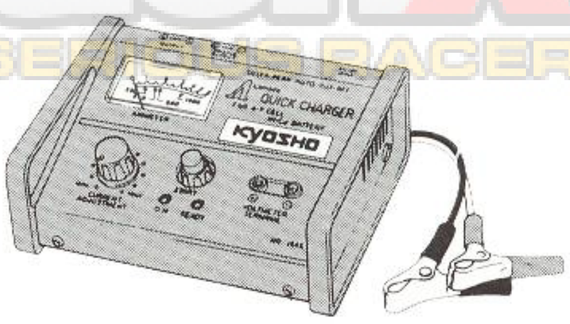

NO.2232

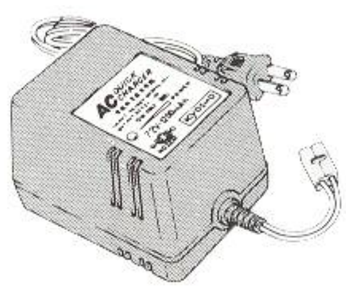

TOOLS REQUIRED

(The following tools are included in kit)

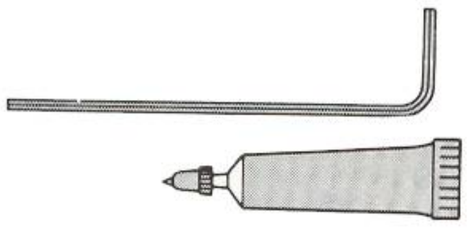

1.5mm Allen Wrench

Greases (2)

(The following tools are Required for Assembly)

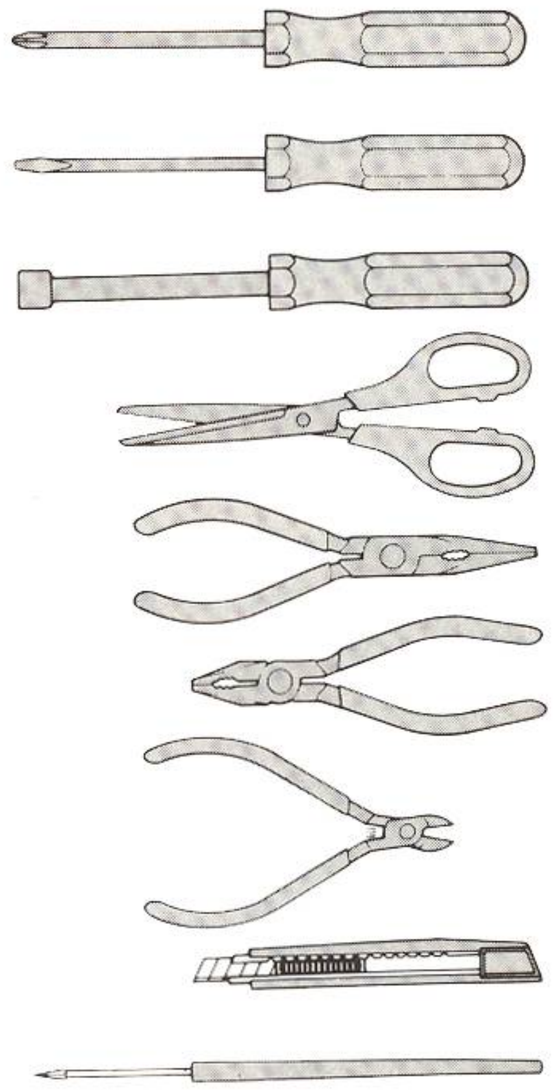

Philips Screw Driver (L, M, S)

Solt Screw Driver (M)

Box Driver (5.5 & 7mm)

Scissors

Needle Nose Pliers

Wire Cutter

Sharp Hobby Knife

Awl

Instant Glue

Polyca Paint

Micron Line Tape

Brush

HOW TO CHECK THE RADIO CONTROL UNIT

Manipulate the radio in order of the number 1 to 8.

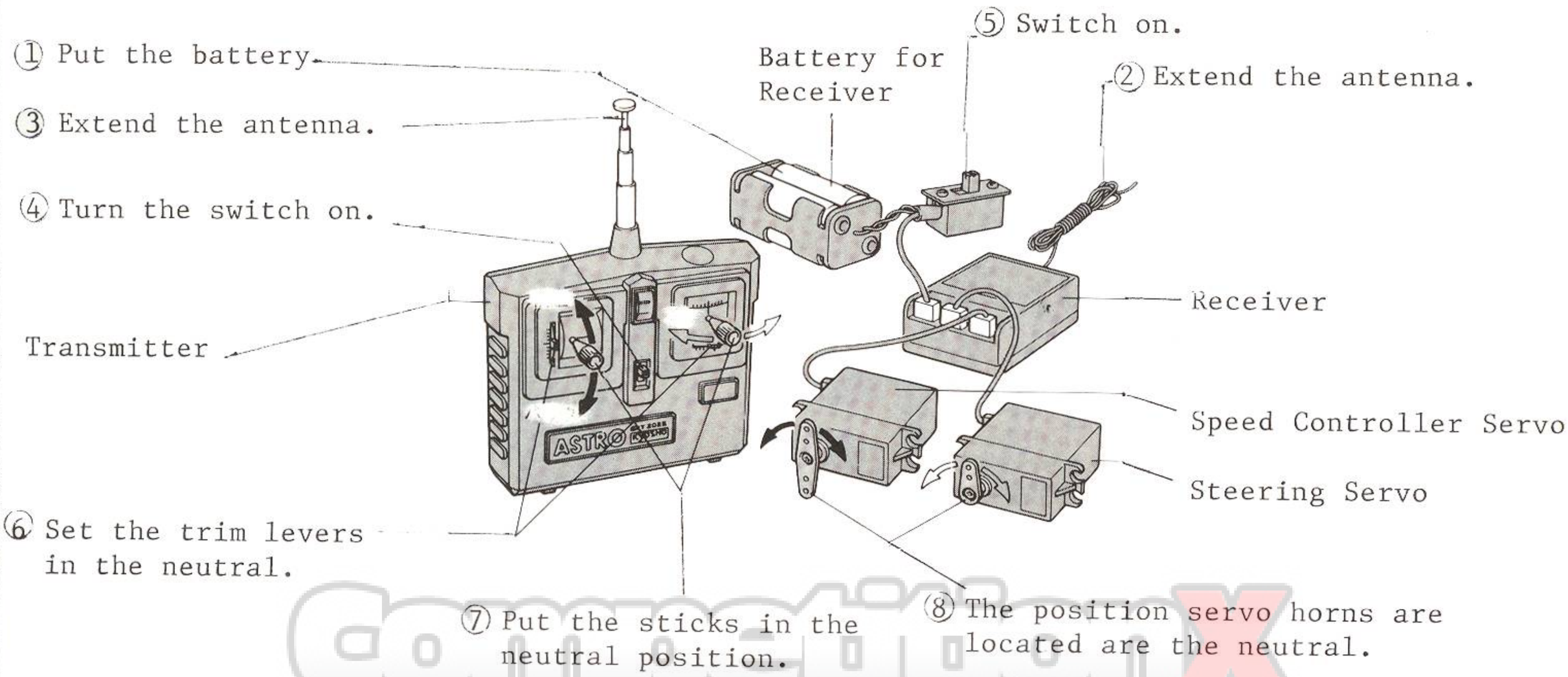

*When turning the switch on, get the switch of the transmitter first, then that of the receiver.

A 2 channel radio control set is composed of a transmitter, a receiver, two servos, and a battery box.

*Transmitter ..... This is to control the models. The manipulation of the control sticks is signaled from an antenna in the form of electric waves.

*Receiver ..... Transmits the wave signals received to the servos.

*Servos ..... Operate the controls by means of motor and gears according to signals provided from the receiver.

*Antenna ..... Plays an important role of emitting the wave signals from the transmitter antenna, and the receiver antenna catches them. They must be fully extended when in operation.

*Trim Levers ..... Adjust the neutral position of the servos and fine tuning of Steering, and of the speed controller to control forward or backward advancement.

*Lever Meter ..... This is to detect the amount of electricity left in the battery, and how distinctly the signal waves are emitted.

*Servo Horn ..... This is to transfer the movements of the servo to a controlled component. There are several types in shape to be selected depending upon the use.

1 ASSEMBLY OF GEAR BOX

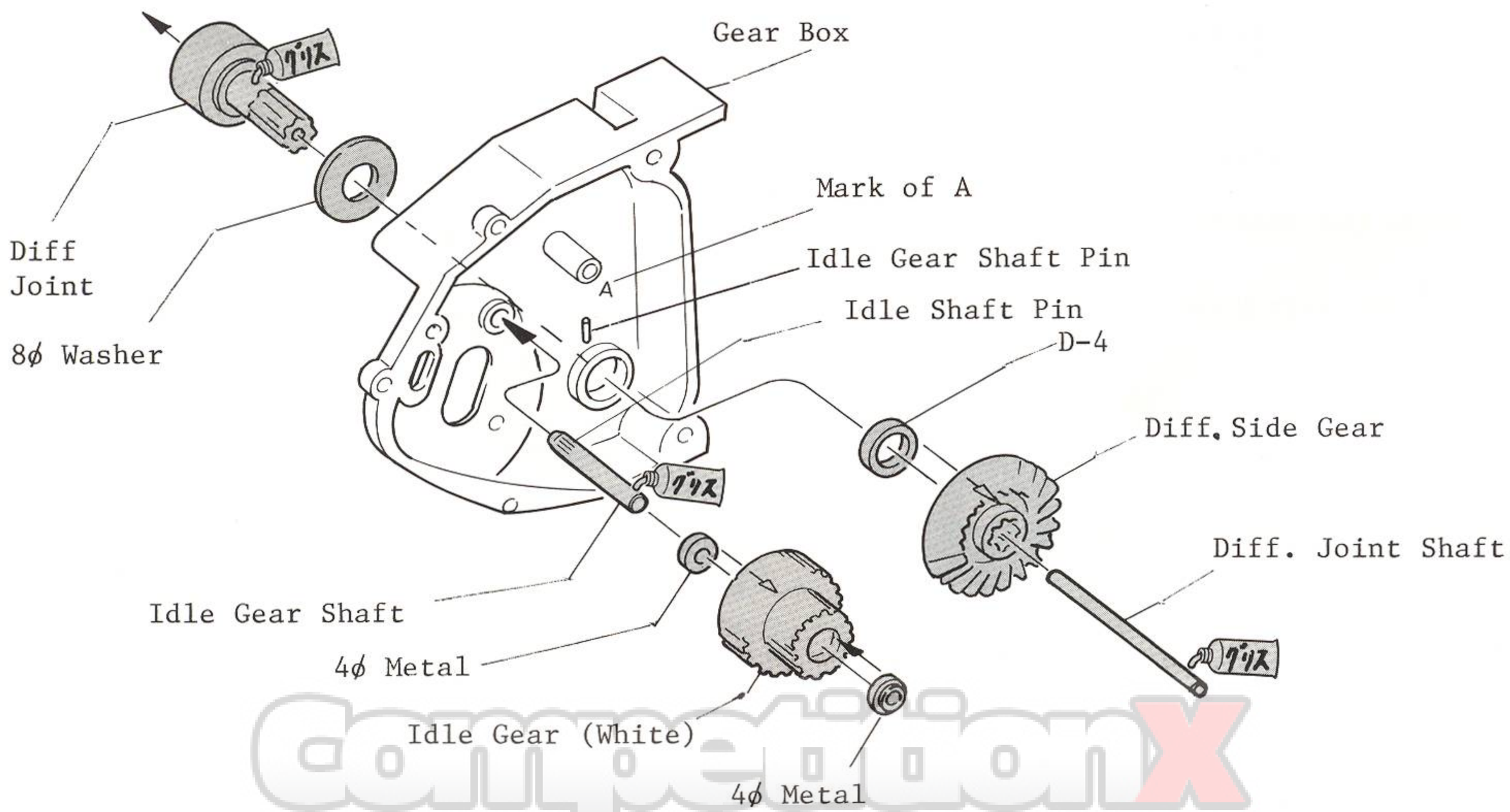

2 ASSEMBLY OF GEAR BOX

M3 x 12
Self Tapping
Screw

Gearbox B (There is a description of the letter "B" on the other side.)

Counter Gear Shaft

Counter Gear

D-3

D-2

D-3

Diff. Carrier

Diff. Bevel gear

Diff. Side Gear

D-4

8ø Washer

Diff.
Washer

3 ASSEMBLY OF SUSPENSION ARMS

Ball
Sheet

8ø Pillow Ball

M4 x 10
After screwing in the M4 bolt and removing it, tighten the 8mm pillow ball.

5ø Plastic Bearing

Knuckle Arm A (the letter "A" is marked on the other side): Form 4 assemblies, 2 ea A and B blocks

Upper Sus. Arm

M2 x 6
Self Tapping Screw

Lower Sus. Arm

4 ASSEMBLY OF MAIN FRAME

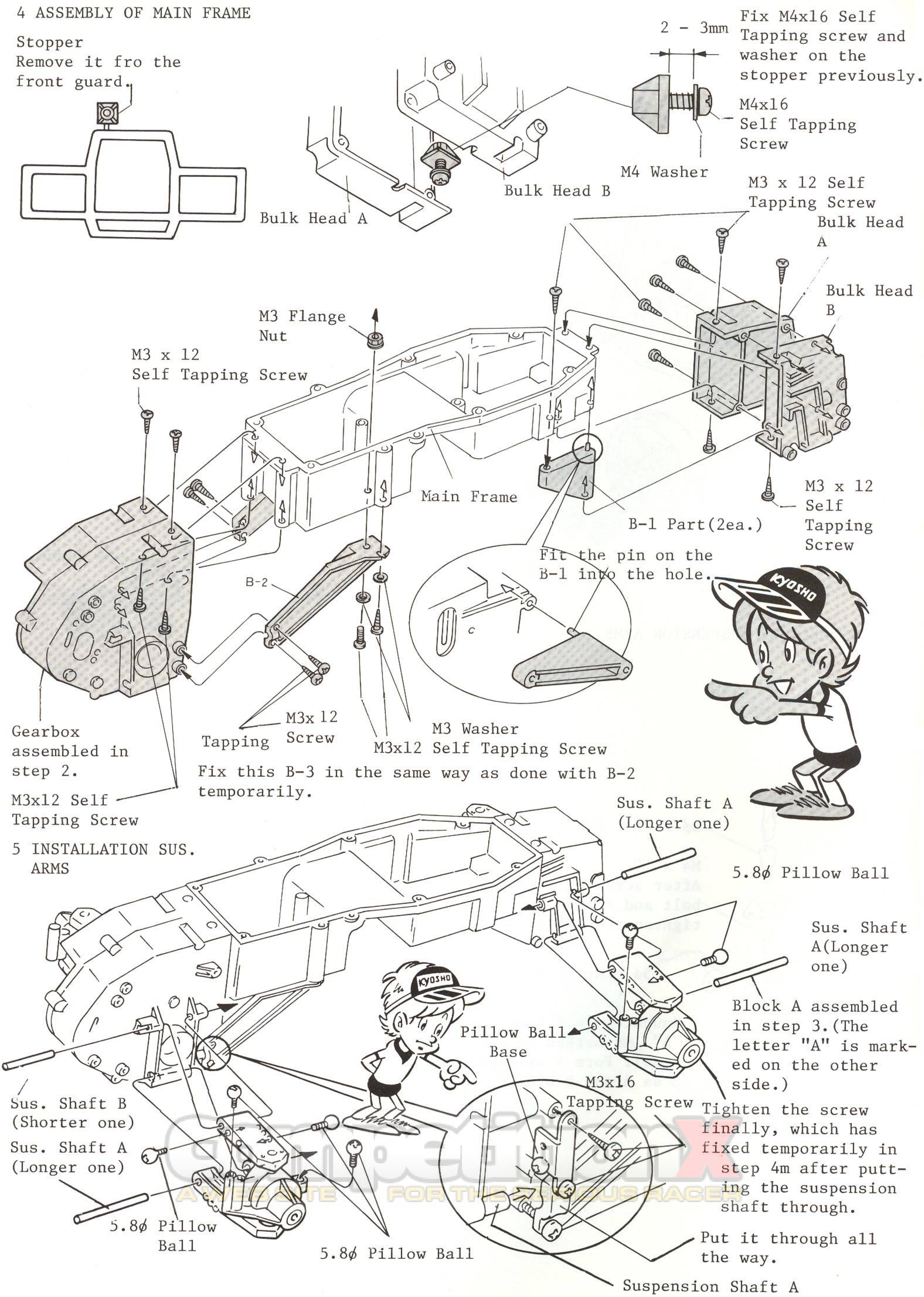

5 INSTALLATION SUS. ARMS

6 ASSEMBLY OF SPEED OCNTROLLER

Put the controller horn onto the controller pivot and clamp down the clawa with pliers.

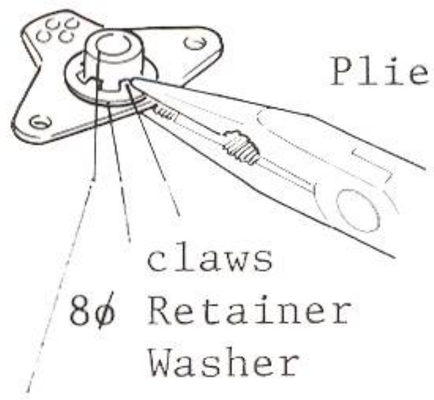

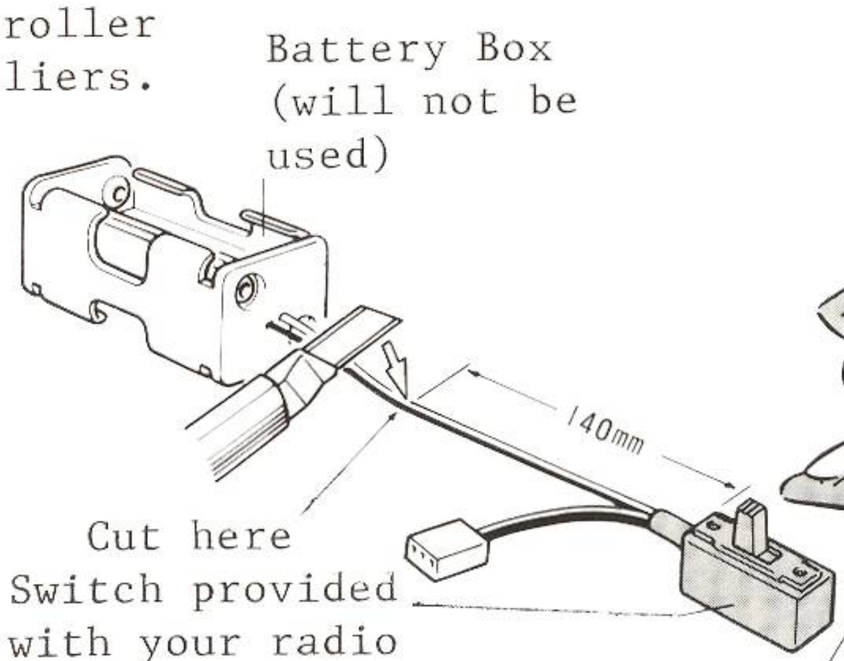

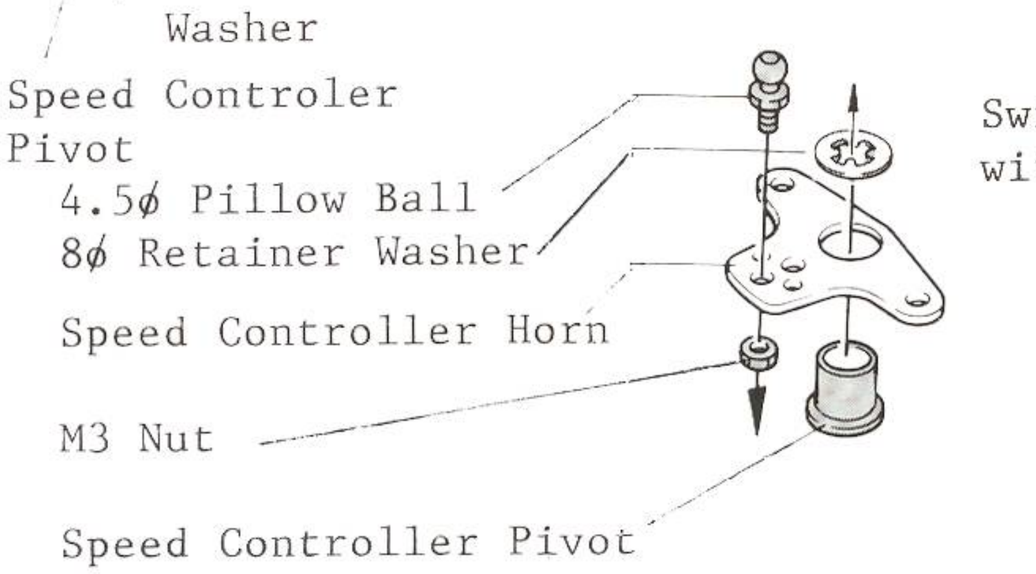

*The contact is easy to come off from the contact holder, so do not fit it until the process as shown in the left side drawing.

Remove the insulator for 5mm.

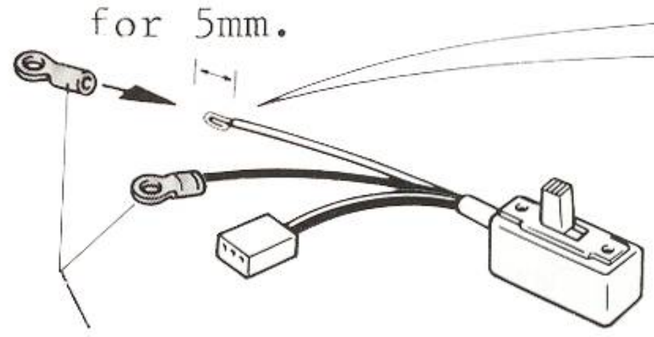

Rug Terminal

Crimp the terminal over the vinyl insulation.

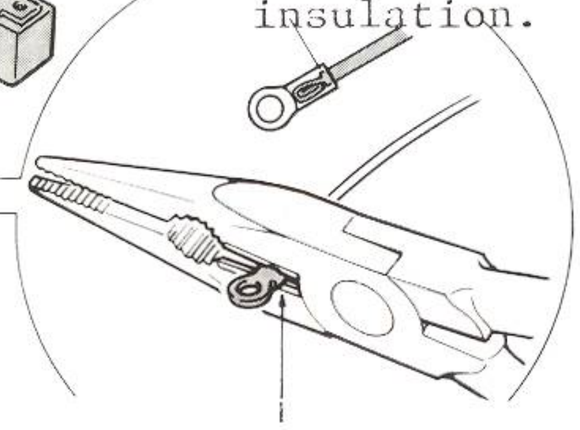

Clamp it at two or three points with cutting blades of the pliers.

*After having attached the terminal, handle the cord with care since the lead is thin and easy to snap.

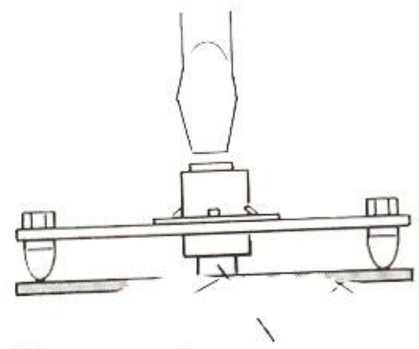

Tighten the controller holding bolt firmly until it presses the PC board without any gap.

Confirm the position of the diode before installing it.

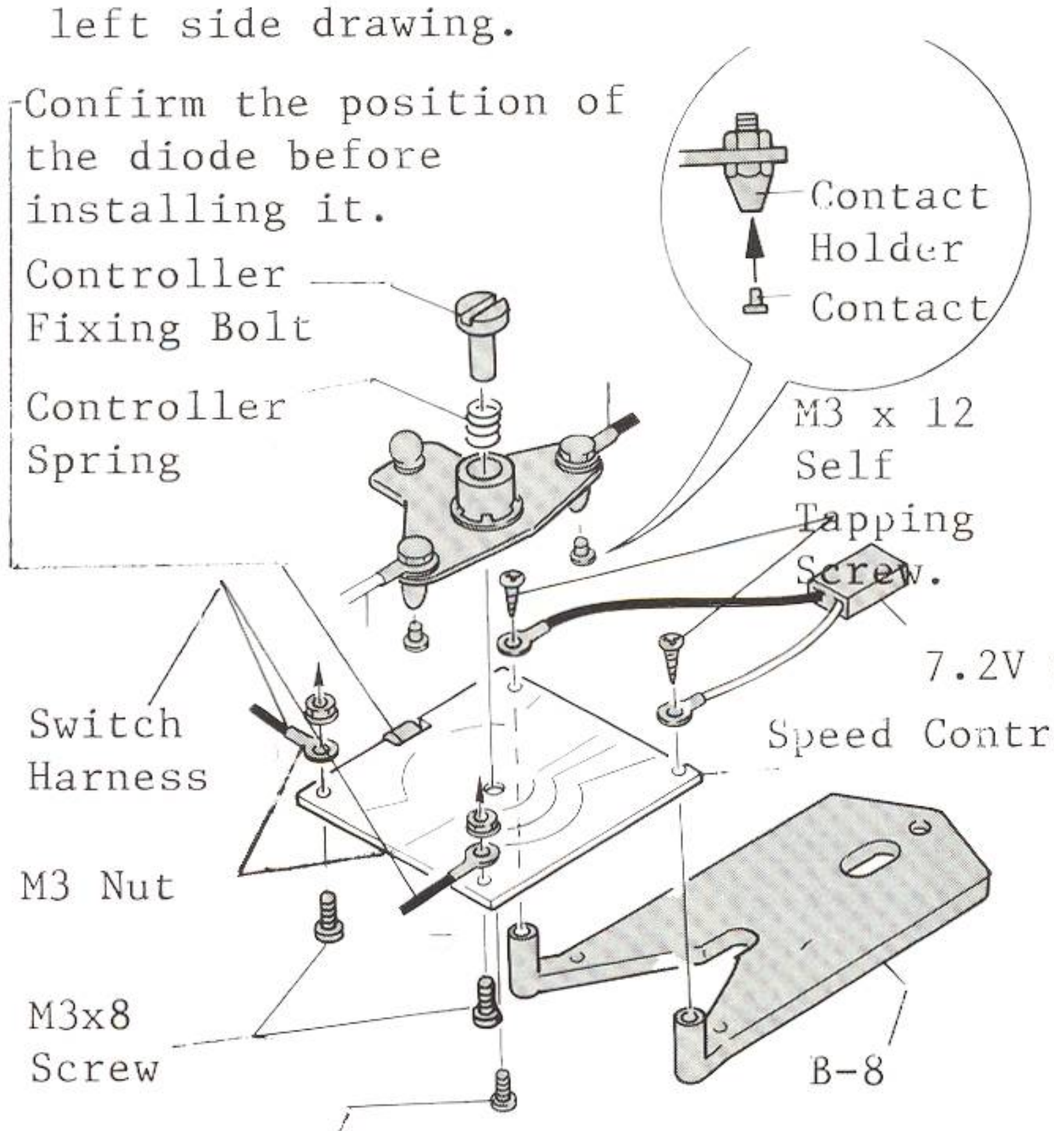

After tightening the screw into the PC board, lock it with cyanoacrylate adhesive.

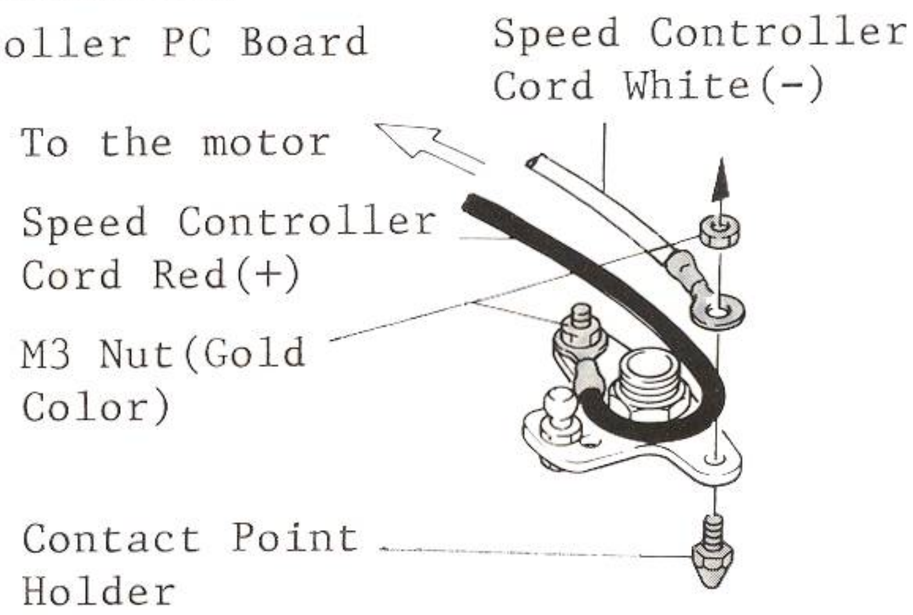

7 ADJUSTMENT OF RADIO

Keep both the stick and trim lever in the center position. (Neutral)

Lever Meter

Switch on

Put some #unit 3 (AA size) into the radio as directed by the instruction of your radio.

White ⊖

Red ⊕

Hold the stick and the trim lever in the center posiiton and turn off the switch of receiver.

Switch Haness

Stick Type

Servo

This stick controls the steering servo.

Receiver

CH2
CH1

7.2V 1200mAh Ni-Cad Battery

7.2V 1200mAh RACING BATTERY KYOSHO

*In this process, be careful about the polarity.

Handle Type

It is the speed control servo that will respond to the control of this stick.

8 MOUNTING OF SPEED CONTROL SERVO

Connect the speed control rod to the hole which is 13mm away from the center.

Trim the arm into the shape as shown.

Cut away the shaded area.

Cut off the arm to the length of 15mm.

Servo Horn

Right angle

Speed Control Servo Double Sided Tape

This is the screw which has been holding the servo horn.

Nylon Strap

Right angle

Cut here.

(Actual Size)

4.5ϕ Ball Link

Speed Control Rod

Right angle

Screw in the rod to the length of 65mm.

This is the speed controller assembled in step 6.

9 PREPARATION OF STEERING SERVO

B-6

This is the screw which has been holding the servo horn.

Fit the grommet into this hole.

M3 Washer

B-7

M3 x 12 Self Tapping Screw

M2x6 Self Tapping Screw

Z-3

Z-4

M3 Flange Nut

M2 Nut

Z-2

Z-3

Z-1

Grommet

M2 x 15 Screw

M3 x 8 Self Tapping Screw

Fix the servo horn in position to the edge of the servo.

Use a servo horn with holes, distance between which is 13 to 16 mm; and fix the Z-4 over it.

10 MOUNTING OF RADIO CONTROL UNITS

Put another grommet if the bolt in the groove was not covered by the first grommet.

M3 x 12 Self Tapping Screw

Grommet

Receiver

Double Sided Tape

Fit it into the groove

A-1

M3 Washer

Decal ⑦

M3 x 8 Screw

(Switch Holding Bolts) swich came with your radio control units.

Fit the A-1 into the square hole on the main frame, paying attention to the direction.

Fix M3 x 12 self tapping screws temporarily at two points.

*Fix the switch with care that the "on-off" direction corresponding with the indication on the decal 7.

11. INSTALLATION OF TIE ROD

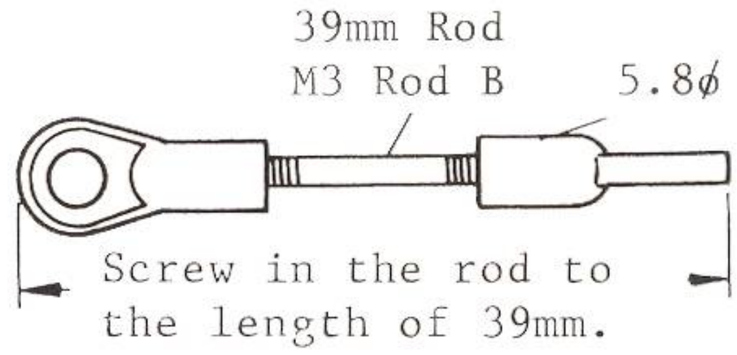

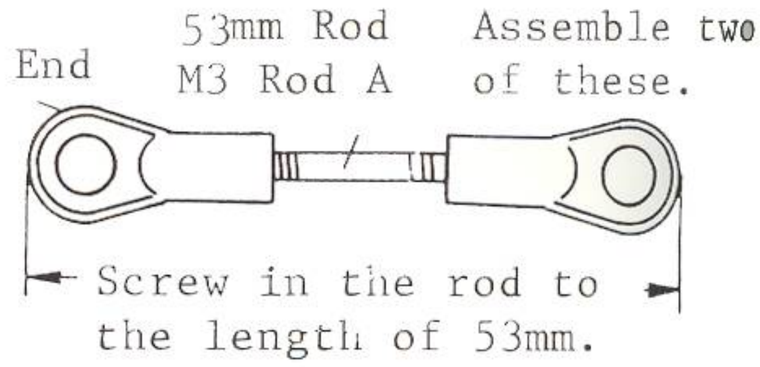

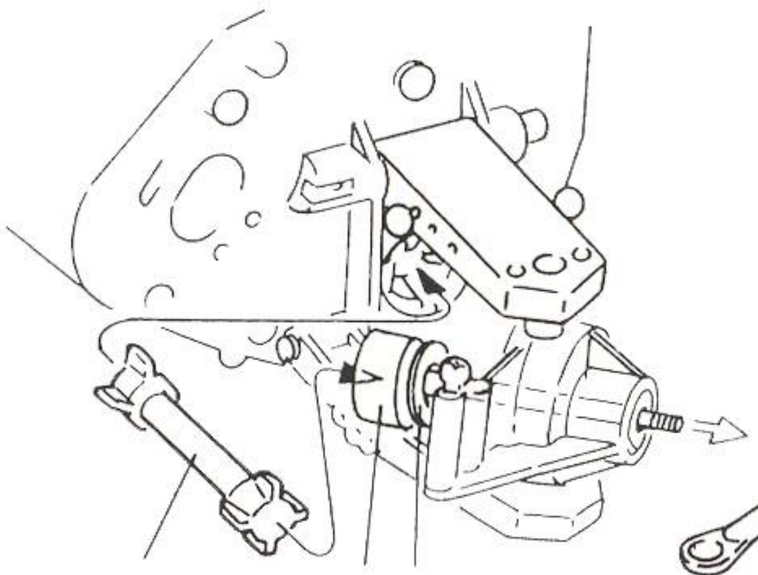

D-5
Rear Wheel Shaft
5ϕ Washer

Fix these for the right and left sides

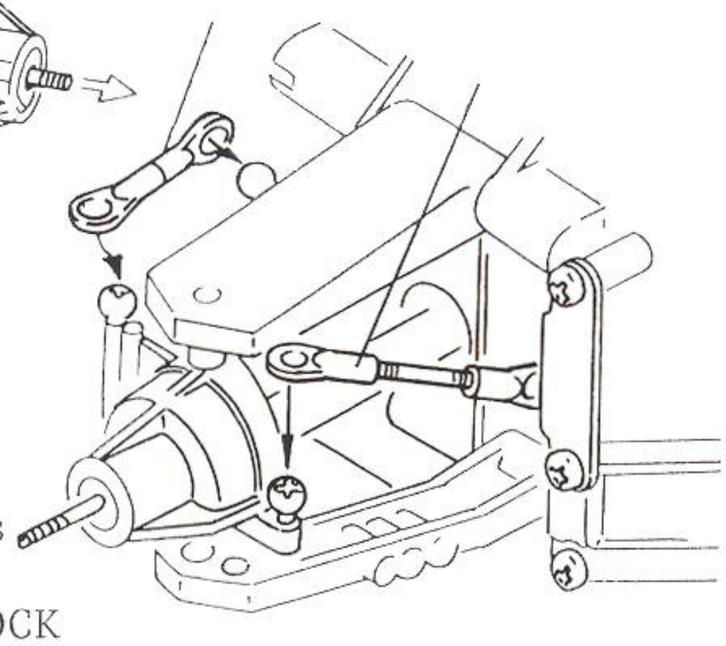

Take off the screw which has been fixed temporarily in step 10.

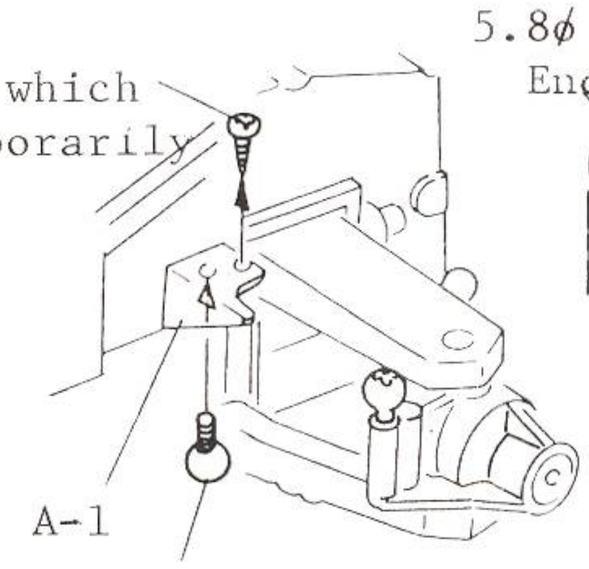

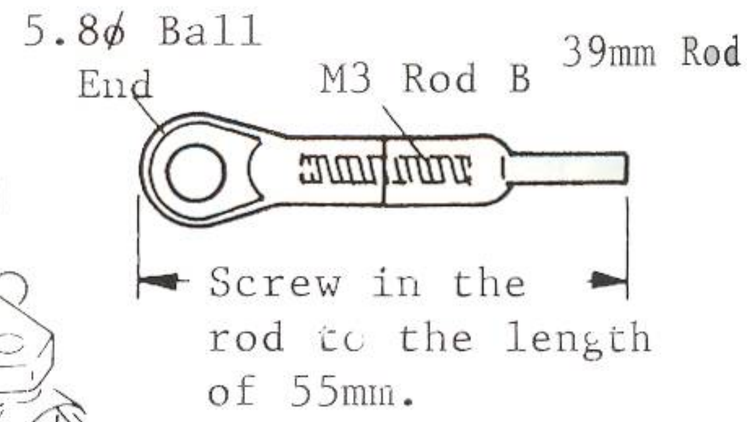

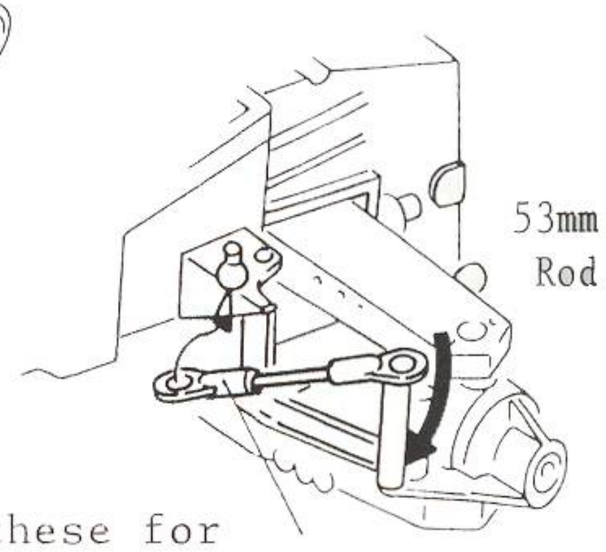

12. ASSEMBLY OF SHOCK

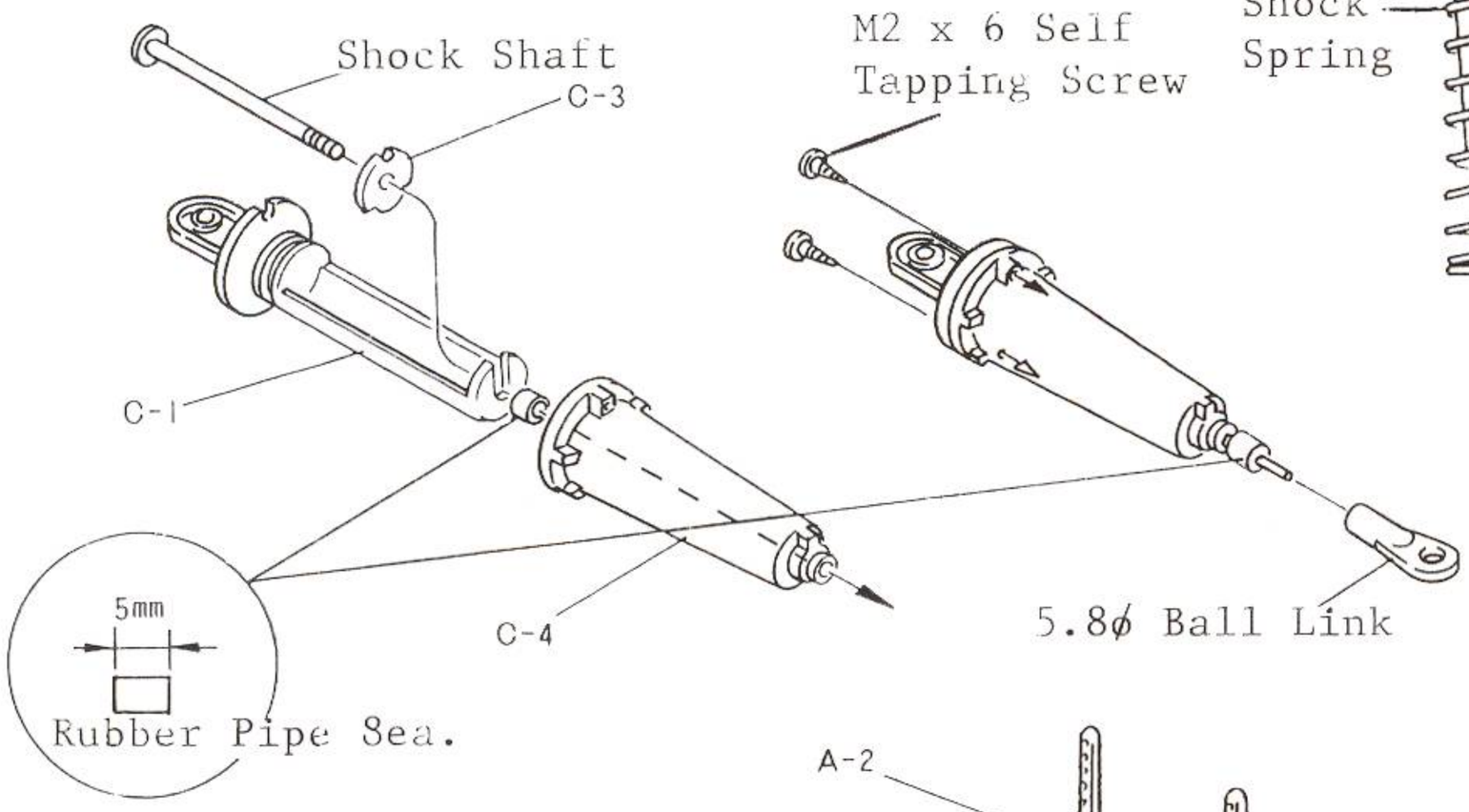

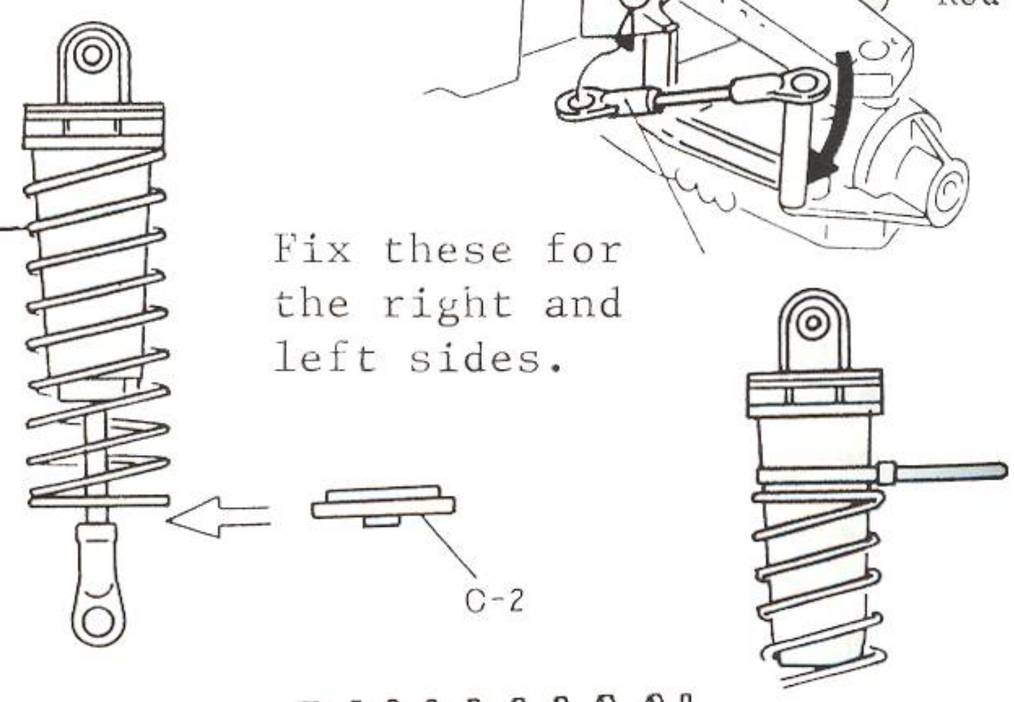

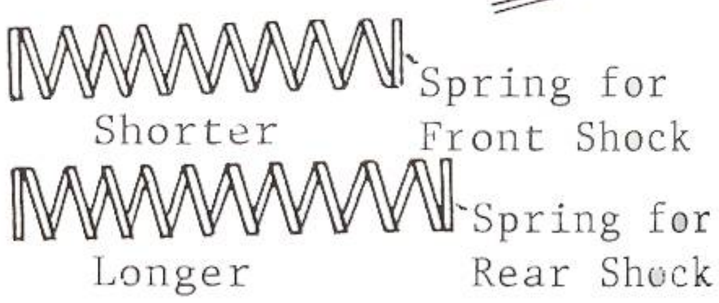

13. FIXING OF SHOCK

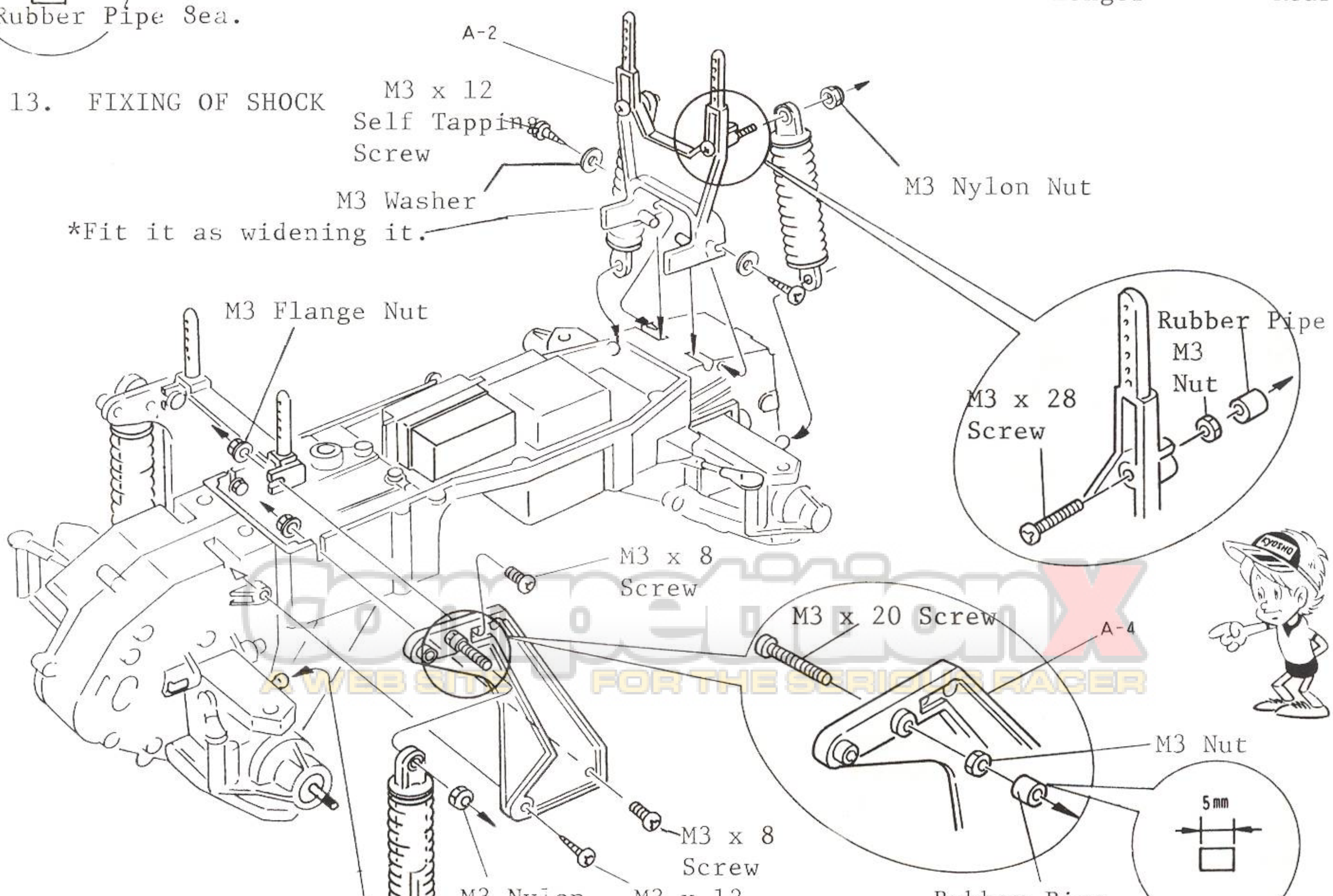

14 INSTALLATION OF BATTERY GUARD

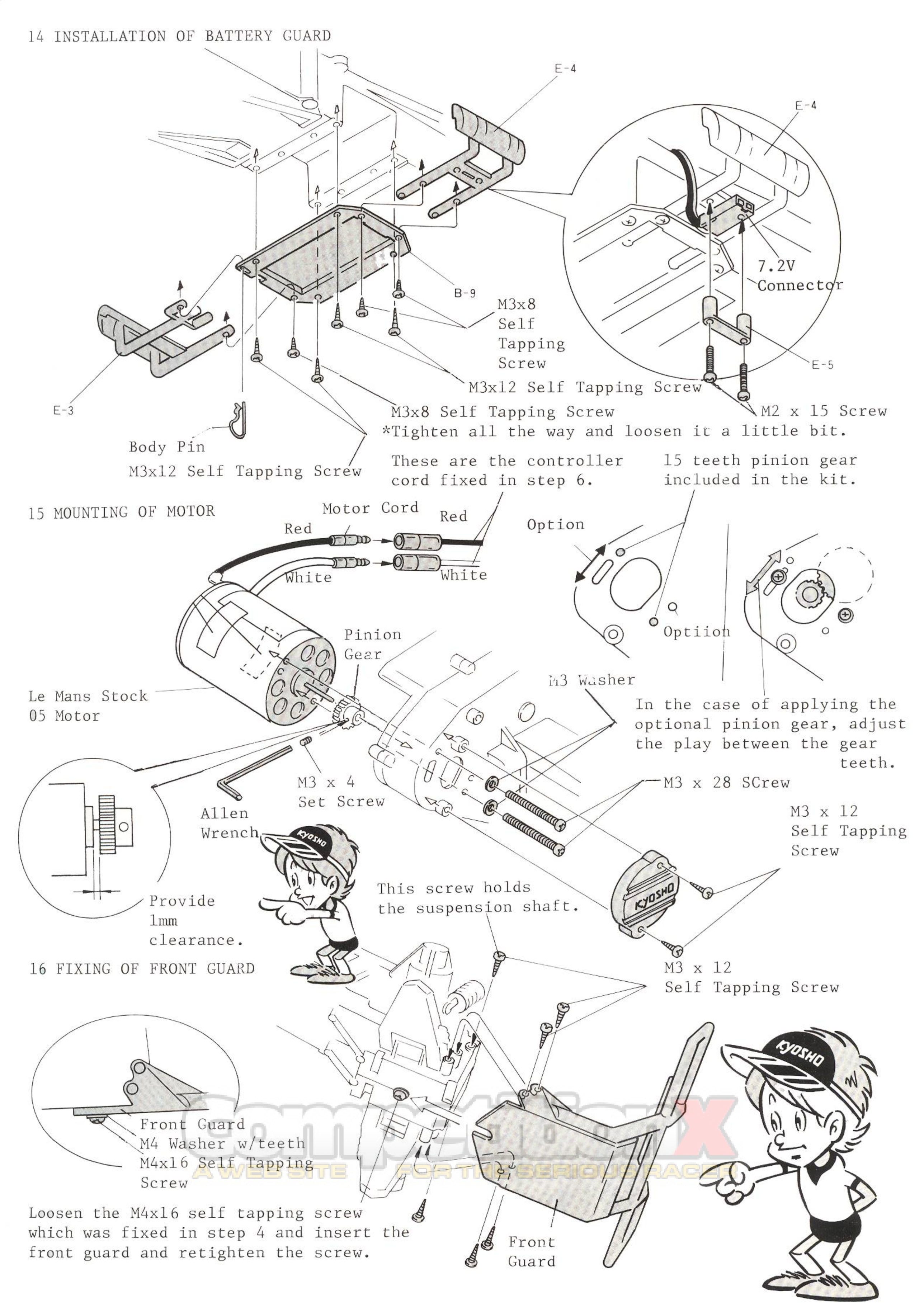

Loosen the M4x16 self tapping screw which was fixed in step 4 and insert the front guard and retighten the screw.

17 FIXING OF REAR GUARD

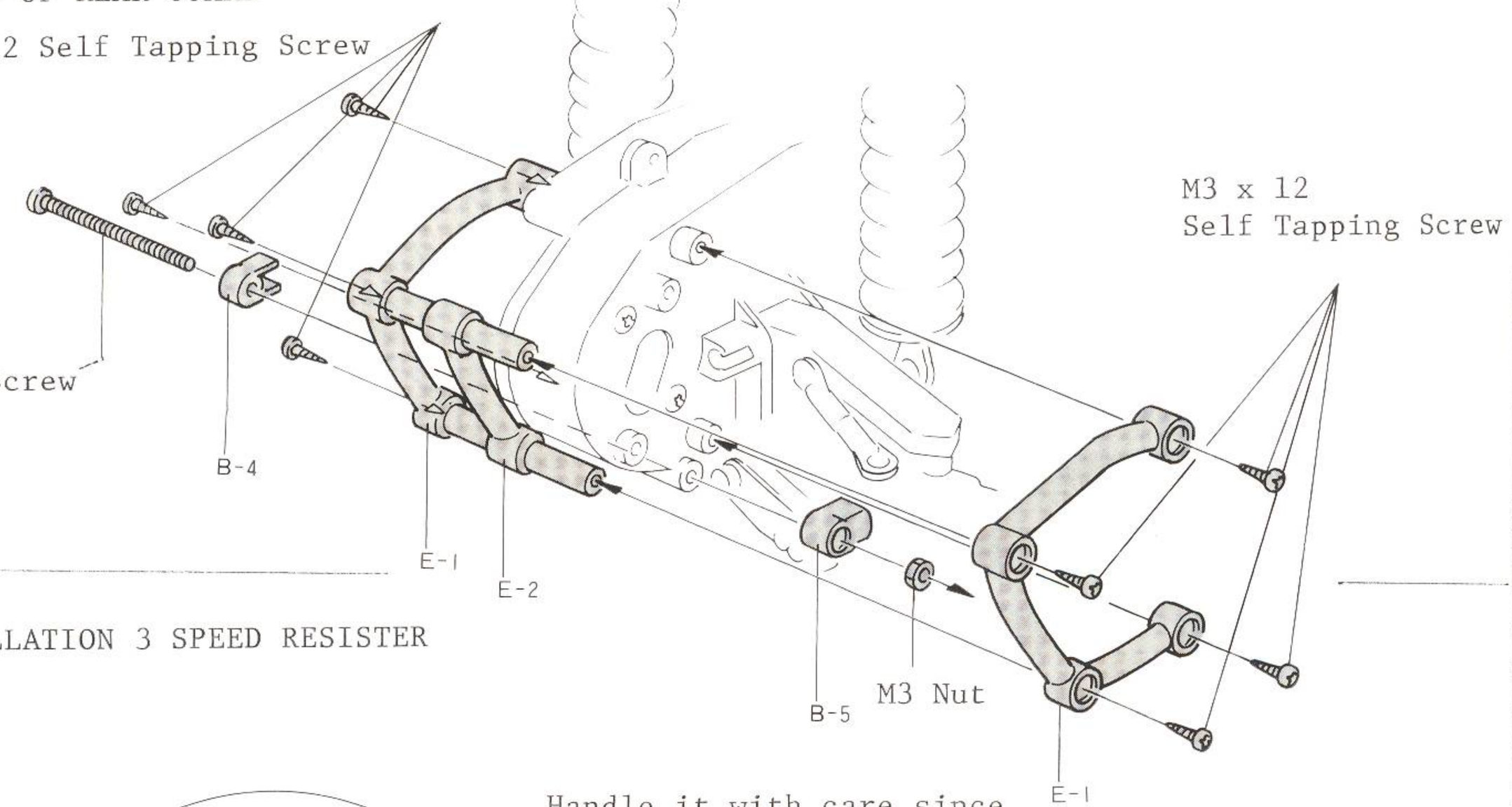

18 INSTALLATION 3 SPEED RESISTER

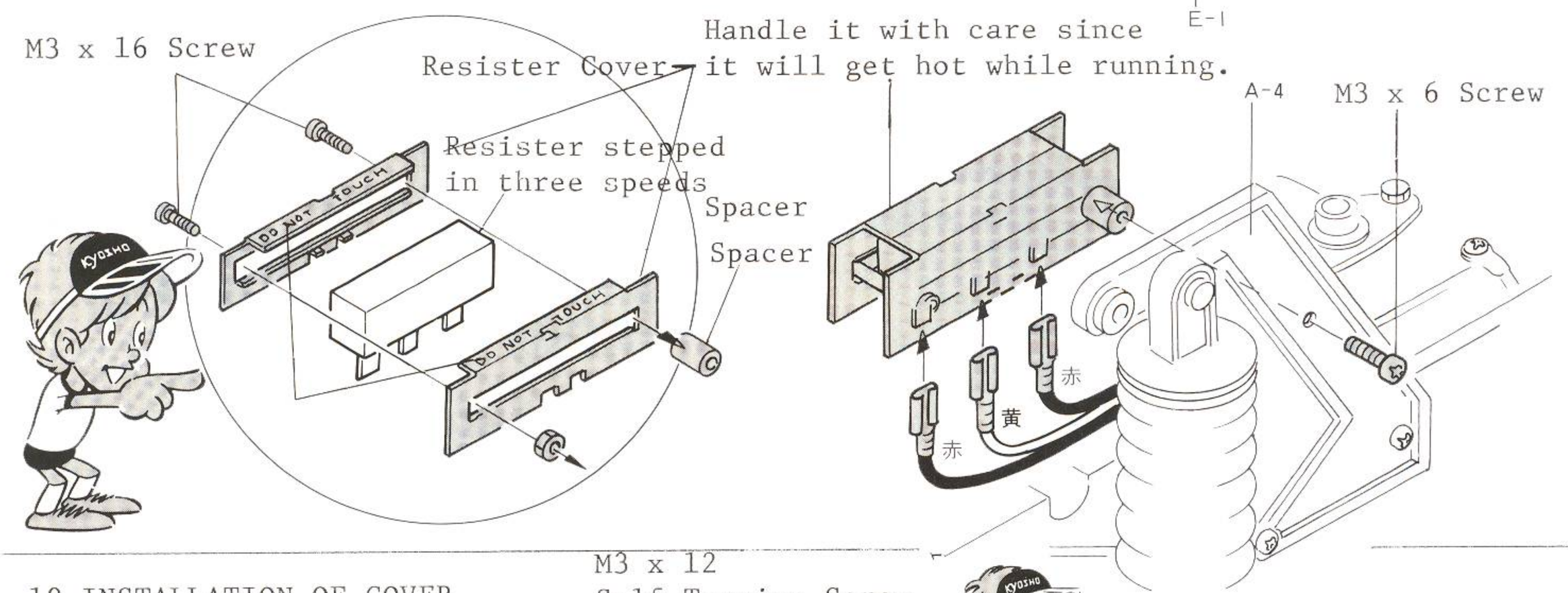

19 INSTALLATION OF COVER

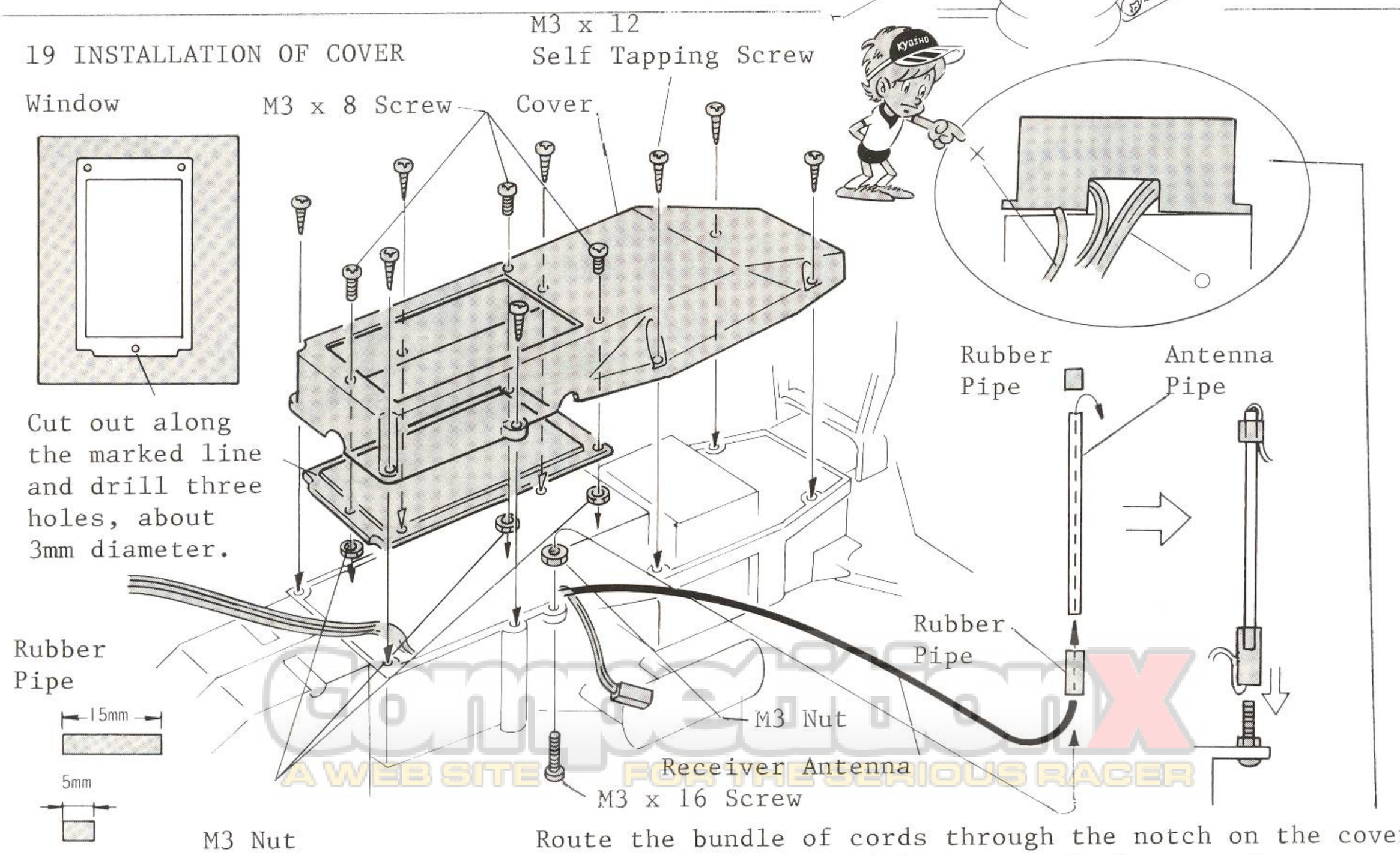

Route the bundle of cords through the notch on the cover, be careful if any cord is not caught between the cover and the main frame.

20 MOUNTING OF TIRES

The tires have different patterns depending upon which side they are mounted.

This is a left side tire.

Wheel A

Wheel B

M3x8 Screw

Wheel B

This is a right side tire.

Wheel A

Take apart the tire and the wheel paired in the kit, and assemble two each set for the right and left sides.

Wheel Shaft Pin

Wheel Shaft Pin

(Sectional View of Tire)

Wheel C

Tire

Wheel A

Wheel B

M3x8 Self Tapping Screw

Front Wheel Shaft

5ϕ Washer

5ϕ Washer

Wheel Hub

Fit the wheel shaft pin into the grove on the other side.

M4 Nylon Nut

Press in the wheel A and B aligning the screw holes. (Applying soapy water may make it easier.)

21 PAINTING OF BODY

Cut off the portion marked with ▭ with a hobby cutter or scissors.

A pair of scissors which is made to cut policarbonate material "Round Cutter" is available at Kyosho.

Use the tip of the blade for cutting curved lines.

For straight lines, use the root of the blades.

Smoothen the cuts with a sander or a file.

Make the window frame on the body with the Micron Tape and paint the inside of the body.

The polyca Colors are paints composed exclusively for painting polycarbonate resin. It is very easy to use. There are 12 different colors.

The Micron Line Tape can be used as masking tape and as a meterial to drawn patterns. They are available in 6 different colors and 3 widths.

22 FIXING OF ACCESSORIES AND PARTS

Bore holes of 3mm diameter on the marks.

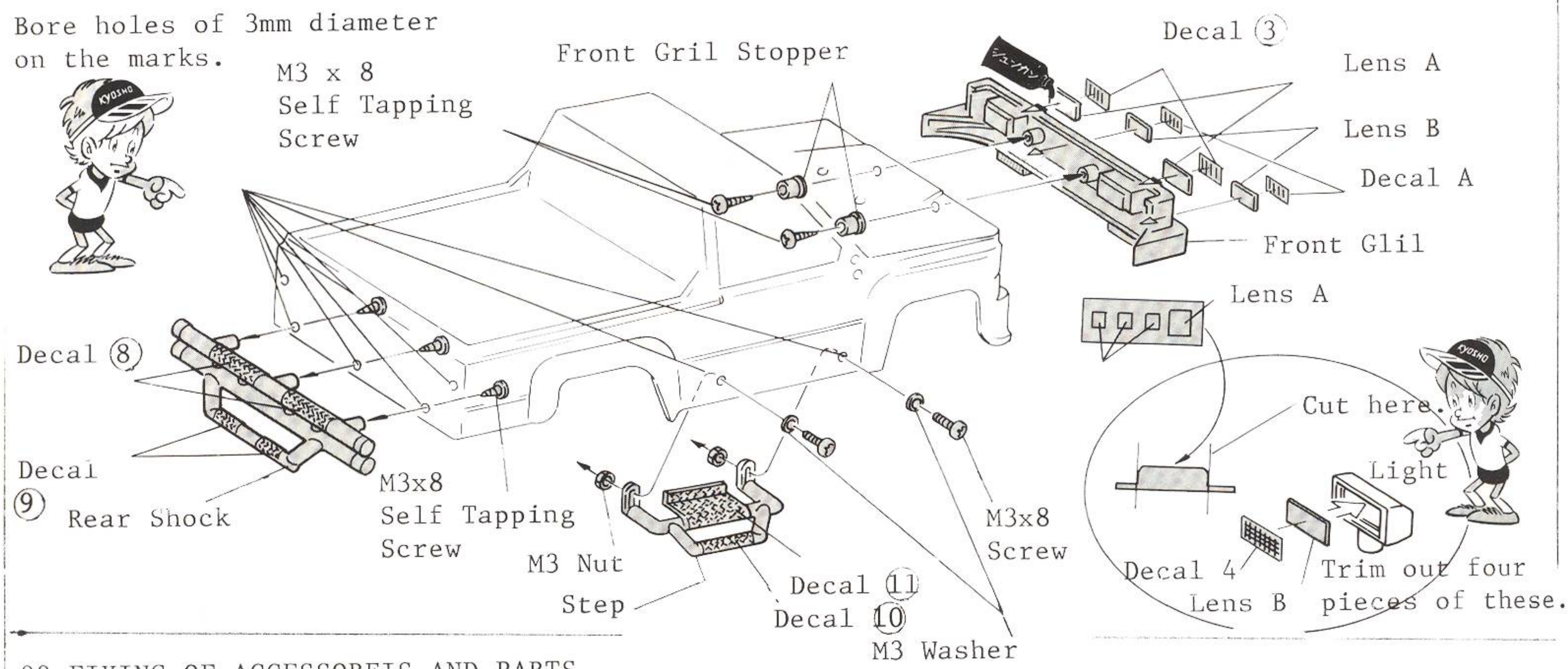

23 FIXING OF ACCESSOREIS AND PARTS

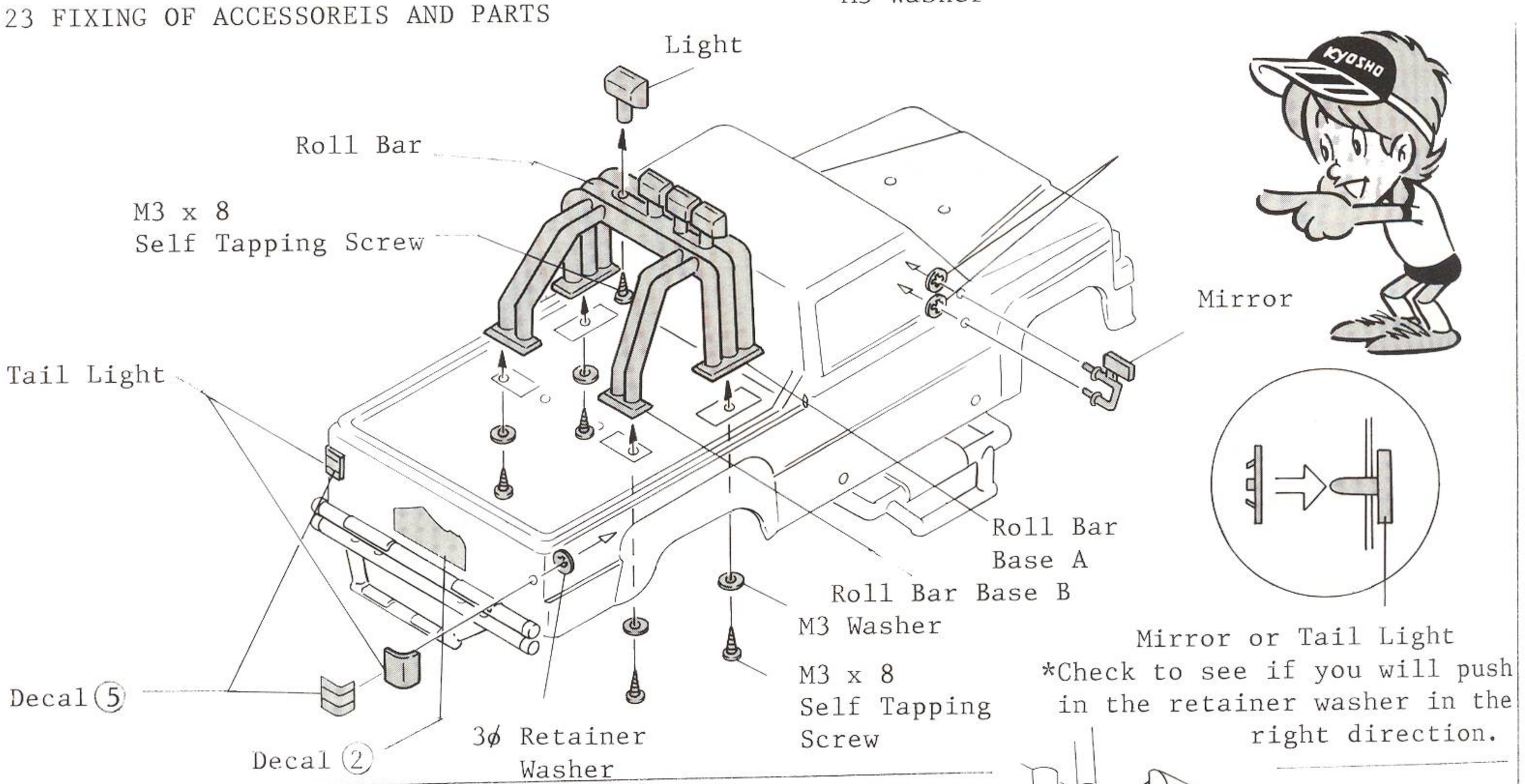

24 MOUNTING OF BATTERY

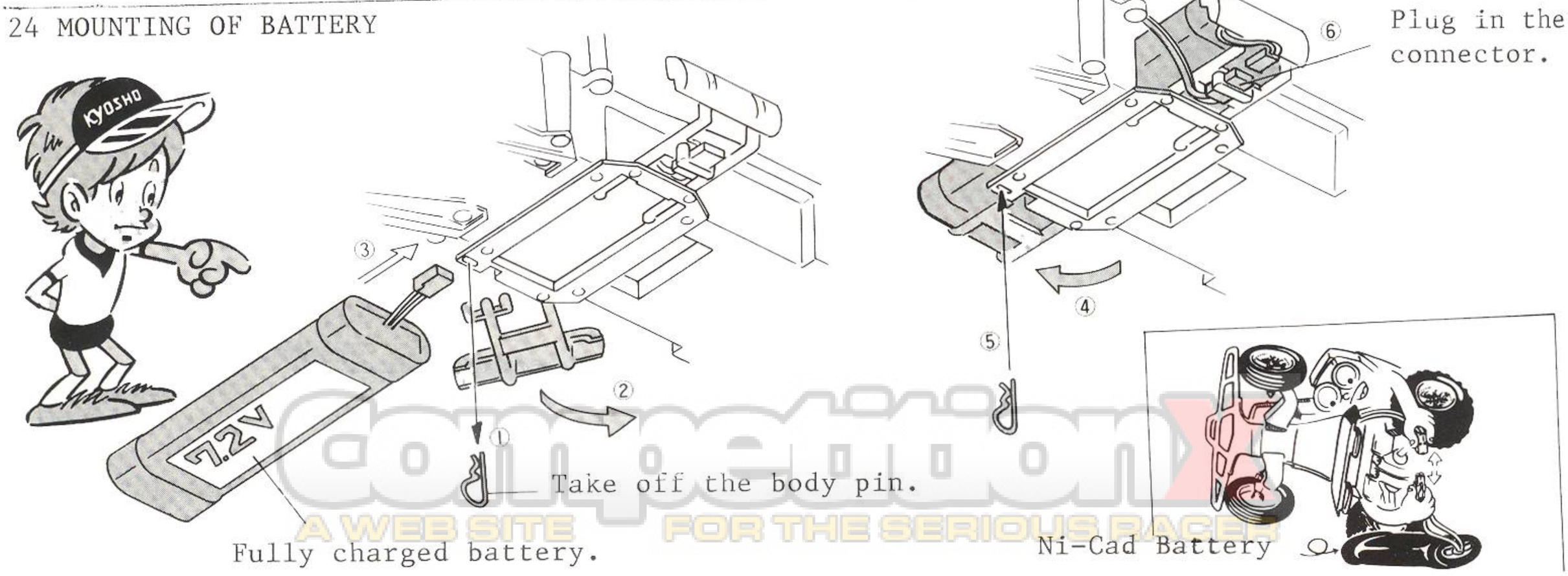

*You have to take away the battery pack when you keep your car not running or store it.

25 MOUNTING OF BODY

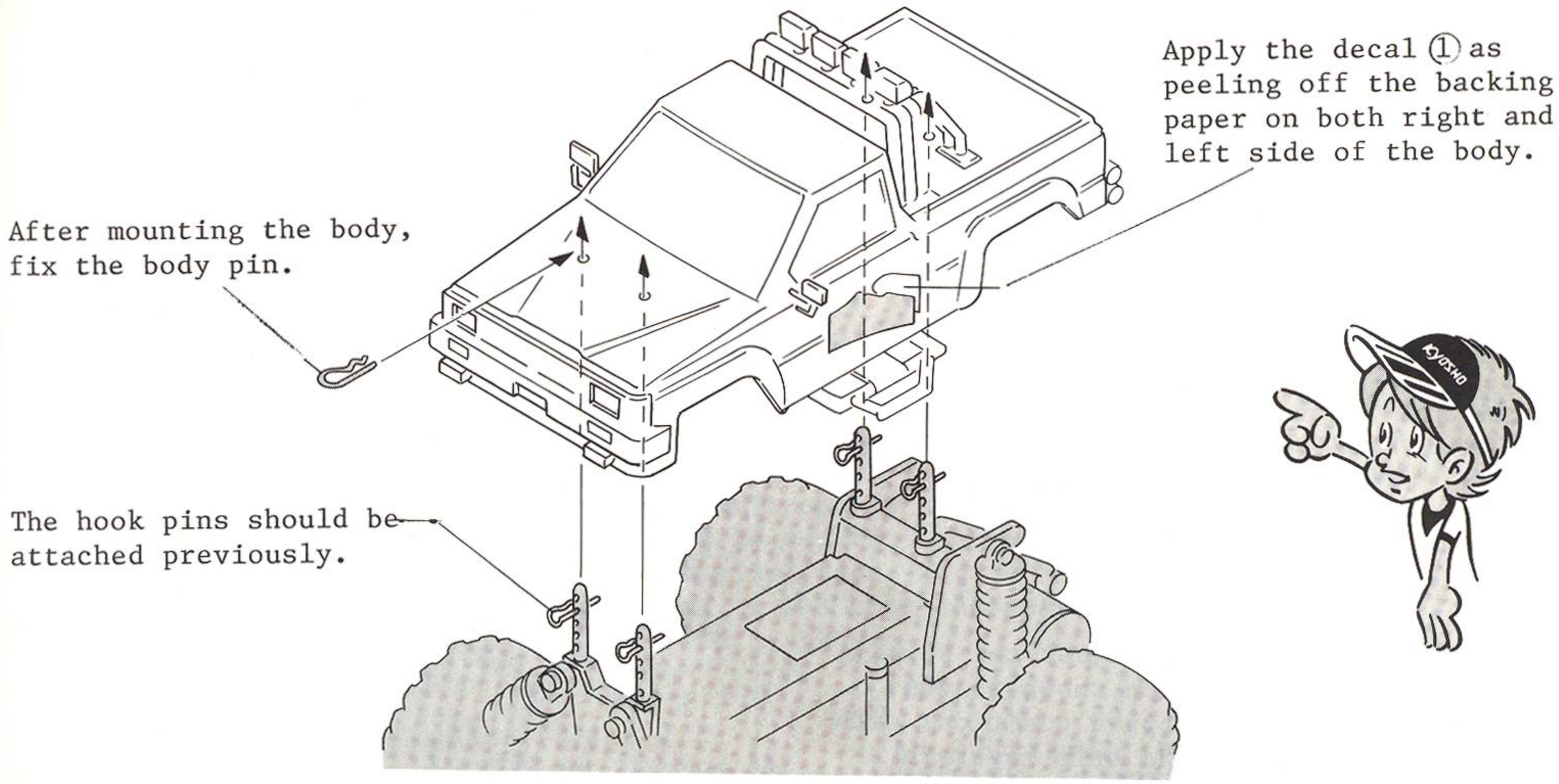

HOW TO OPERATE THE BEC TYPE RADIO CONTROL UNIT

What is the BEC Type?

It is a system in which a connector is provided to power the receiver and servos from the propelling 7.2V mAh Ni-Cad battery. When you use a BEC type radio, you are required just to plug the connector (female) on the car chassis into the BEC connector (male) from the switch harness; then all the connection between the battery, receiver, and servos in complete.

*With a BEC type radio coneect the lug terminals, used in step 6, to the BEC connector and fix them onto the speed controller PC board at the terminal bolts as shown in the drawing below.

1. Remove the vinyl insulator from the BEC connector lead wires.

2. Insert the ends of wires into the lug terminals.

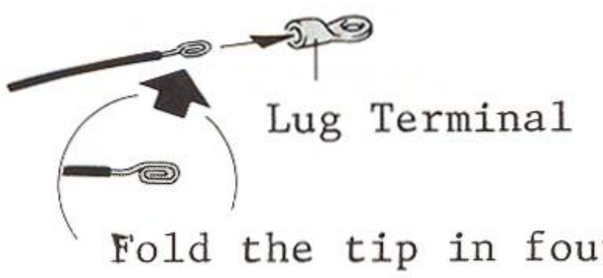

3. Crimp the lugs with pliers

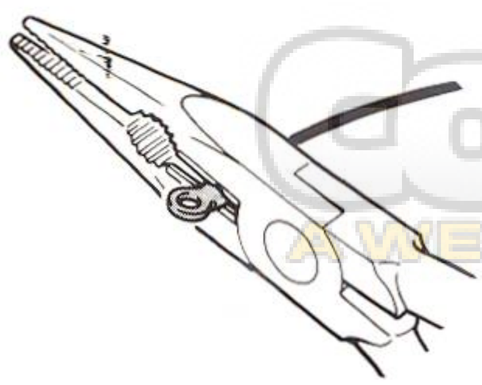

(Fixing Lug Terminal)

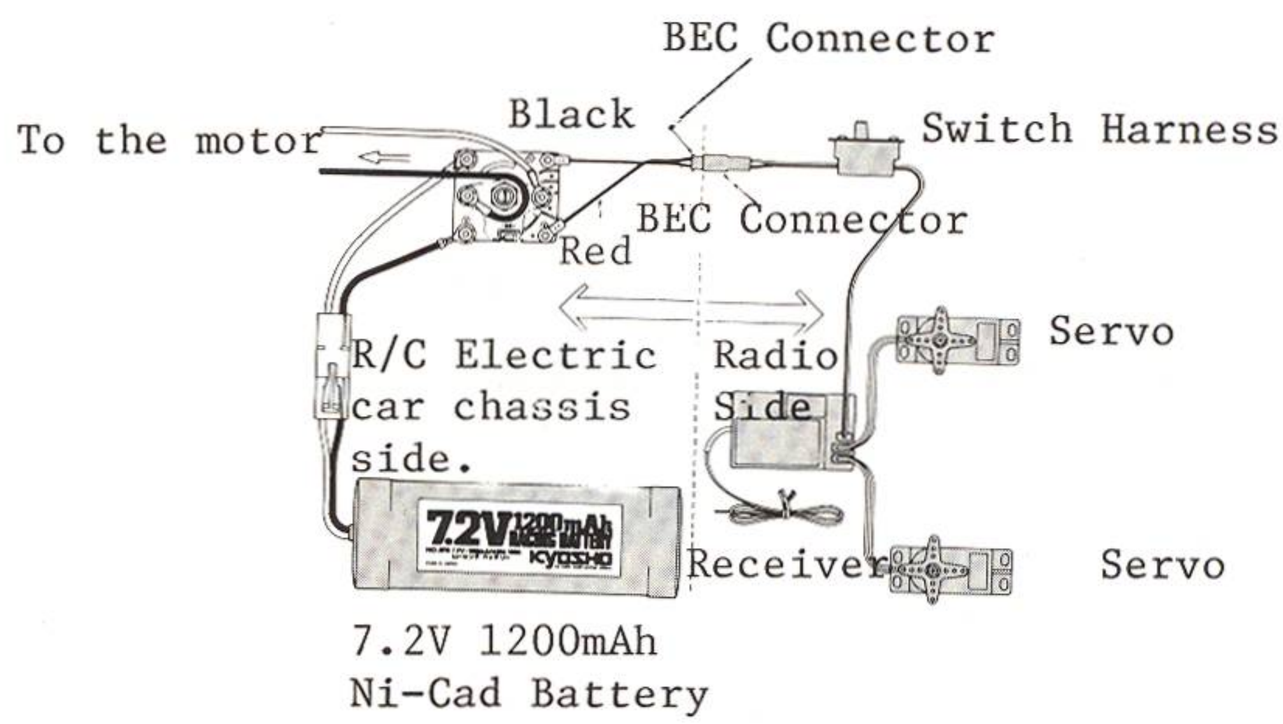

GUIDANCE TO CHARACTERIZING THE CAR CRUSHER "BIG BRUTE"

(Adjusting of Speed Controller)

Plug in the connector from the speed controller to the 7.2V Ni-Cad battery and operate your radio. While adjusting, the wheel of car may start to run, so keep your model upon a small box to make the wheels aloof from the ground.

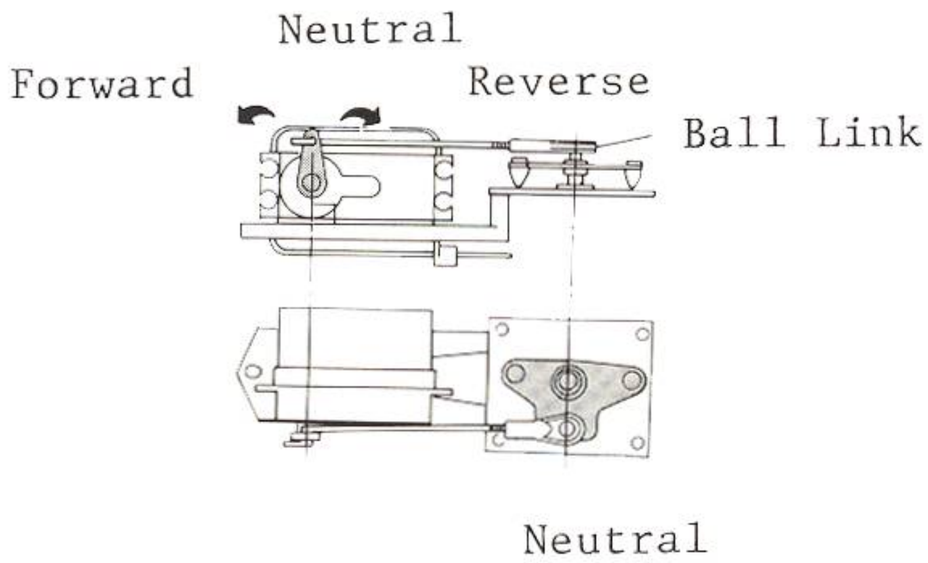

By turning the ball end, adjust the speed controller to the position shown in the drawing above (motor stopped position) with the control stick and the trim lever in neutra.

1. Adjustment of High Speed

When the control stick on your radio is pushed forwrard all the way, the controller should be activated and the motor should run at a high speed. By the motor sound, you can tell if the motor is running high, medium, or low speed.

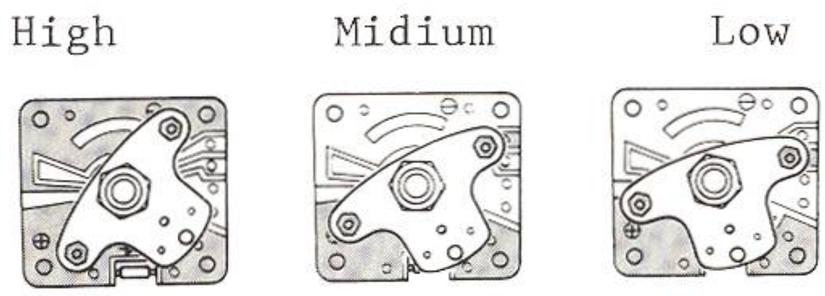

2. Adjustment for Reverse

Pull the control stick and the controller horn should operate as illustrated in the diagram below. The motor should run in reverse.

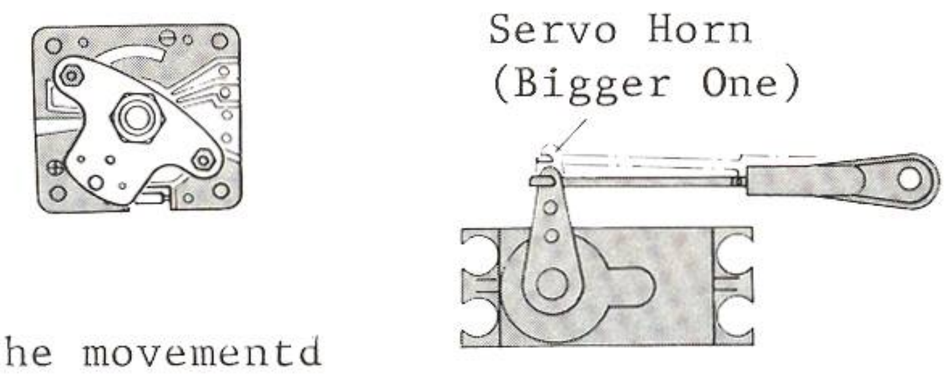

If the movementd described in 1 and 2 are not achieved, replace the servo horn with a bigger one.

(Toe-in Adjustment)

This is important for controlling a car. Set the front wheels converge a little toward the front. This adjustment helps the model run in an straight line and enhances the steering response.

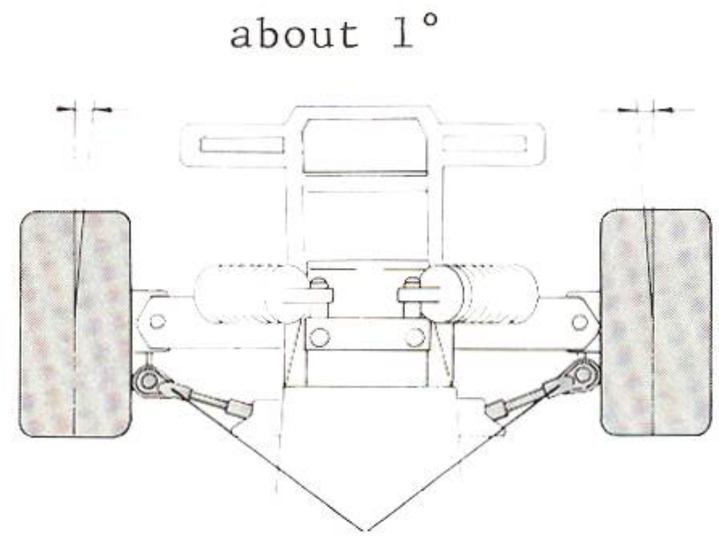

Adjust the neutral position and the toe-in angles with two ball links attached to the tie-rod.

Snap it on after acquiring the correct length.

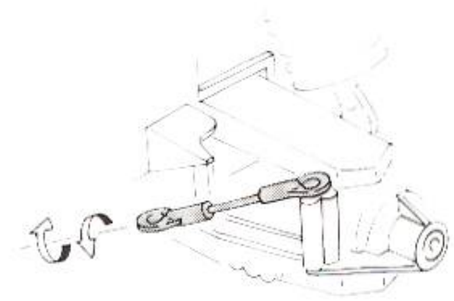

(Oiling)

No.1883 Frontier Hobby Oil

1. Apply a little amount of light oil, such as Frontier Hobby oil, to the shaft, bearings and joints. Wipe off any excessive oil with cloth. Do not use heavy oil as it attracts mud and during a running of the car.

2. Do not oil to the speed controller directly. Electric sparks may burn the oil. Whenever you feel that the speed controller needs lubrication, wipe the PC board lightly with a piece of cloth dampened with the Frontier Hobby Oil.

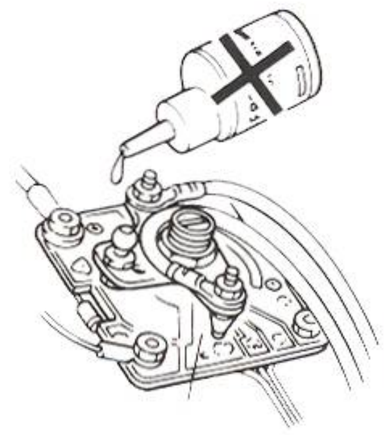

Speed Controller

(Checking Before Running)

Before running the car, check the parts in order of the numbers shown in the picture.

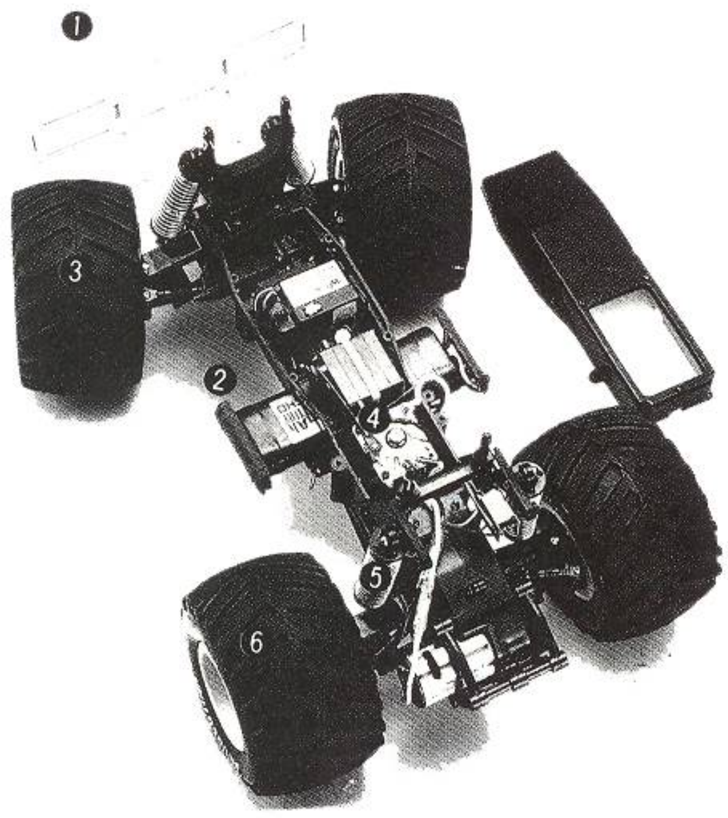

*Drive slowly the first time the car is run. Continue driving slowly until the battery needs recharging. Check all moving parts on the car,

1. Check to see if all bolts, screws and nuts are tightened firmly.
2. Check to see if batteries for radio contorl units and the motor are charged fully.
3. Check to see if the front wheels steer in proportion to your control of the transmitter.
4. Check to see if the forward and reverse movement of the car responds accurately to your contorl.
5. Check to see that all wiring is properly insulated with vinyl tape.
6. Check to see that the rear wheels are free and can be turned by hand.

(Operating Steps)

1. Put batteries into radio control units. Install main Ni-Cad running battery.
2. Turn transmitter switch on.
3. Switch on the reciver.
4. Check to see that the sticks of your transmitter operate correctly, right and left for steering, and up and down for throttle.

*When turning off the switches, turn off the receiver first then transmitter. Otherwise, the car servos may be left in a position other than neutral.

(Trouble Shooting when the Car does not Start)

1. Poor contact of connectors of receivers, servos, batteries or of electric wiring.
2. Poor contact of the speed controller wiper blade.
3. Radio control units are out order.
4. Signal jamming from other radios.

* The radio control units in the Big Brute is powered by the same battery which drives the motor. So, during a run, if you notice any drop of speed, retrieve the car at once and turn the switch off. The battery discharged below a certain limit cannot operate the radio control units and the car will be out of control.

LIST OF PARTS

Blister

18 Front Grille(1)

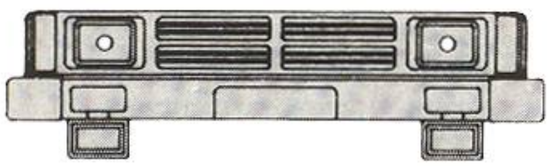

20 Front Wheel Shafts(2)

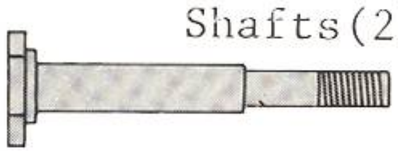

58 Speed Controller PC Boad(1)

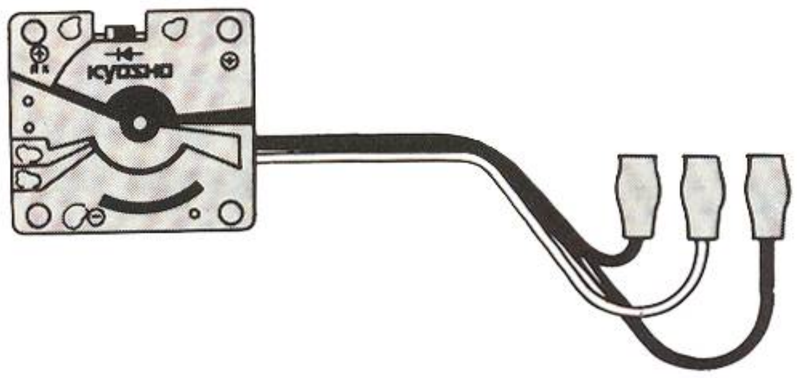

62 8ϕ Pivot Balls(8)

63 5.8ϕ Pivot Balls(16)

59 Le Mans Stock 05(1)

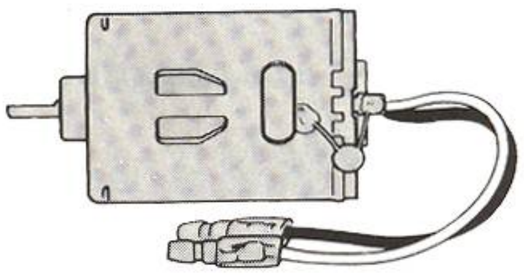

61 Rear Wheel Shafts(2)

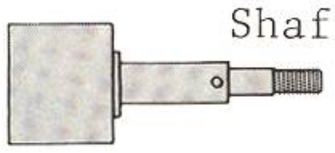

64 Pinion Gear (15T)(1)

75 Shock Springs(2) (for front)

76 Shock Springs (2)(for rear)

56 Motor Cords(2)

65 3 way register(1)

(Big-1)

3 Bulk Head A (1)

4 Bulk Head B (1)

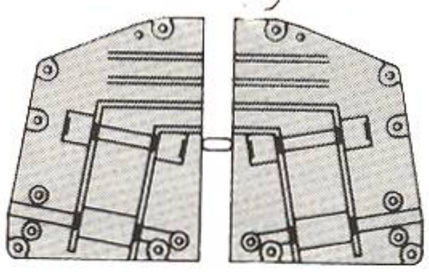

6 Gear Box B (1)

5 Gear Box A(1)

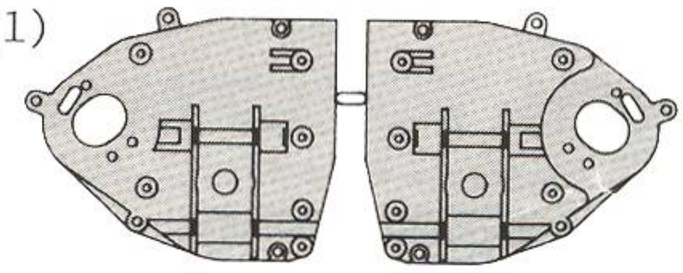

(Big-2)

7 Knuckle Arms A(2)

8 Knuckle Arms B(2)

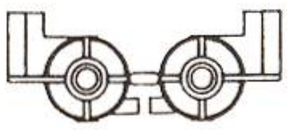

9 Upper Sus. Arms(4)

10 Lower Sus. Arms(4)

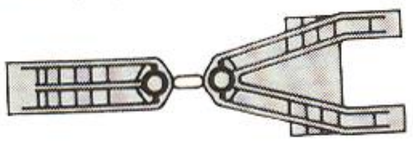

(Big-3)

1 Main Frame(1)

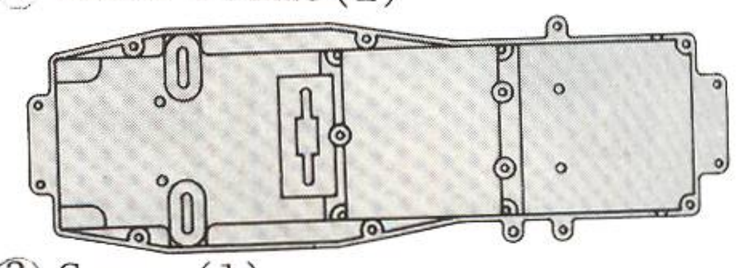

2 Cover(1)

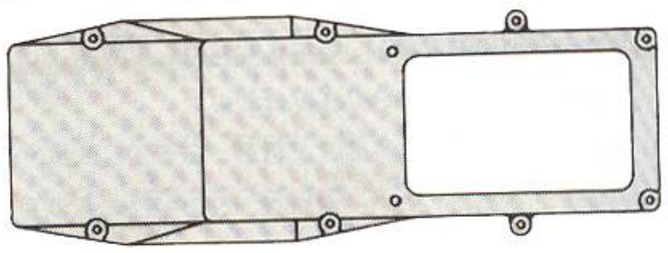

(Big-4)

B Block Part(1)

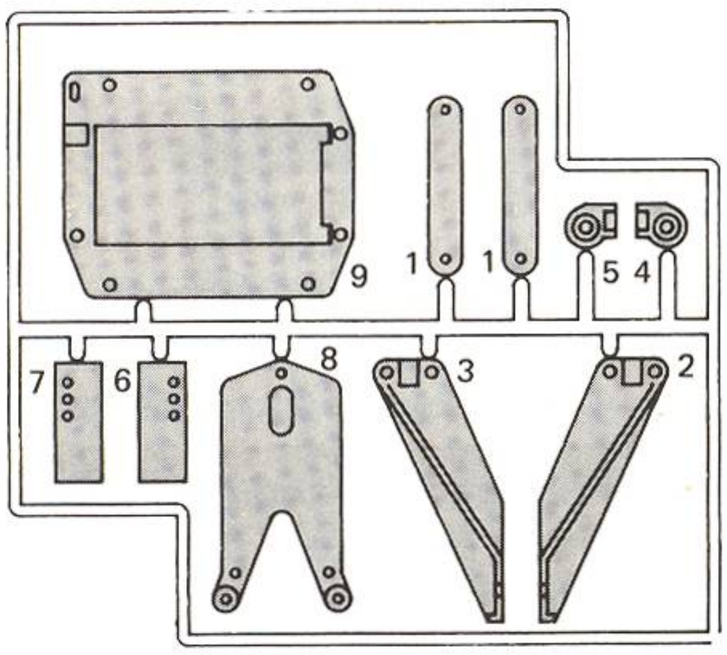

(Big-5)

A Block Part(1)

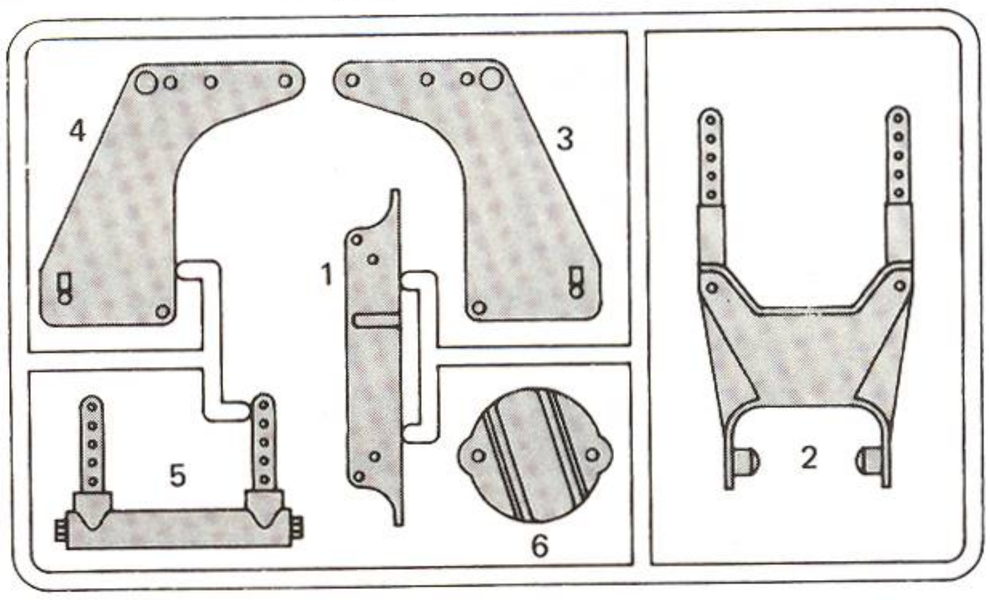

(Big-6)

C Block Parts(2)

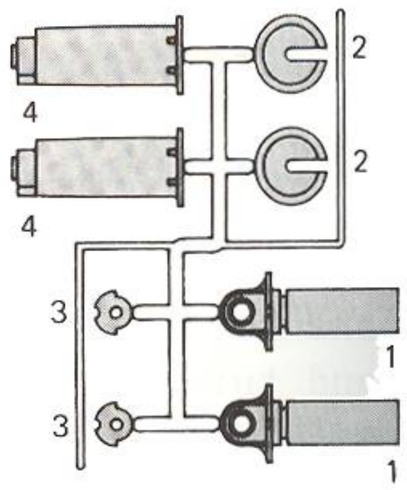

(Big-7)

12 Stopper(1)

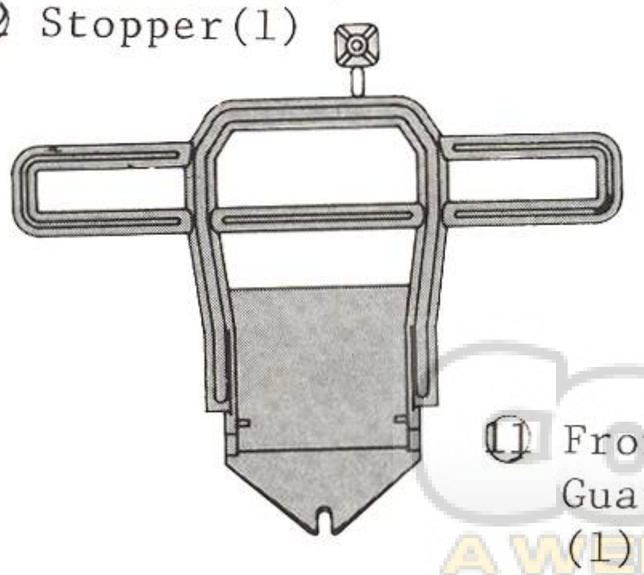

11 Front Guard (1)

E Block Part(1)

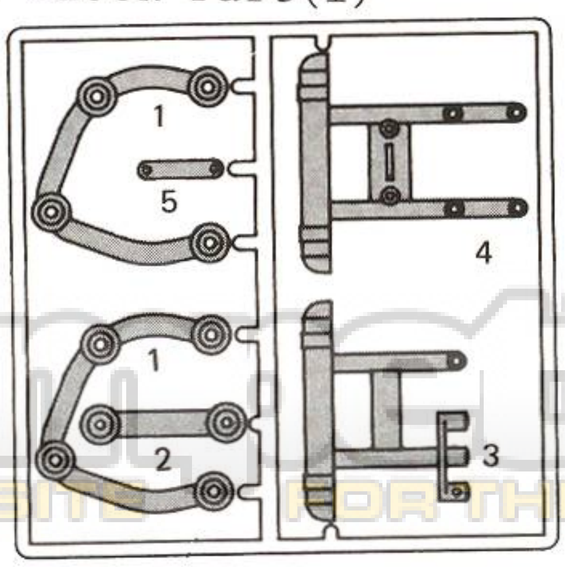

(Big-8)

13 Roll Bar(1)

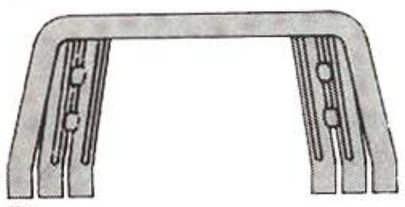

14 Steps(2)

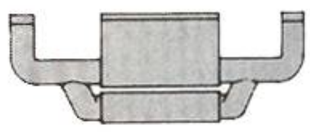

15 Rear Shock(1)

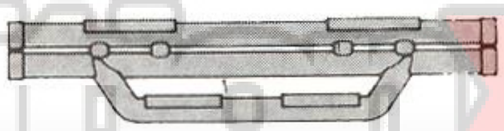

17 Roll Bar Bases B(2)

16 Roll Bar Bases A(2)

Big- 9

19 Front Grille Stoppers (2)

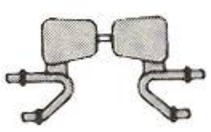

20 Mirror A(1)
21 Mirror B(1)

22 Lights(4)

23 Tail Lights (2)

LIST OF PARTS

(Big-10)

26 Diff. Bebel Gears(3)

24 Diff. Carrier(1)

Z Block Part(1)

D Block Part(1)

27 Diff. Joints(2)

28 Counter Gear(1)

29 Idle Gear(1)

25 Diff. Gears (2)

(Others)

66 Body(1)

81 Decal(1)

67 Tires(4)

68 Wheels A(4)

69 Wheels B(4)

70 Wheels C(4)

(Big-11)

31 Idle Gear Shaft(1)

32 Counter Gear Shaft(1)

33 Diff. Joint Shaft(1)

35 Sus. Shafts A(6)

36 Sus. Shafts B(2)

30 5ø Plastic Bearing

34 8ø Ball Seats(8)

85 Pillow Ball Base (2)

86 Idle Gear Shaft Pin(1)

87 4ø Metal(2)

37 M3 Rods A(4)

38 M3 Rods B(2)

39 Shock Shafts(4)

41 Wheel Shaft Pins (4)

40 5.8ø Ball Links (16)

72 Lenses A(2)(Big-14)

73 Lenses B(6)(Big-14)

74 Window(1) (Big-14)

81 Decal(1)

84 Antenna Pipe(1) (Big-14)

(Big-12)

45 Speed Controller Horn(1)

47 Speed Controller Spring(1)

46 Speed Controller Pivot(1)

49 Contact Point Holders(2)

48 Speed Controller Stud(1)

50 Contact Points(2) (For Big Brute)

42 7.2V Connector(1)

54 Rug Terminals(2)

57 Speed Control Rod(1)

53 BEC Connector (1)

56 Speed Controller Cords(2)

51 4.5ø Pivot Ball(1)

52 4.5ø Ball Link(1)

79 Nylon Strap(1)

43 Resister Covers(2)

71 Wheel Hubs(4)

80 Hobby Grease(1)

76 Rubber Pipe(1)

82 Body Pins(5)

77 Double Sided Tape(1)

13 INSTALLATION OF SHOCK

M3 Washers(2)

M3 Nuts(4)

M3 Nylon Nuts(4)

M3x12 Self Tapping Screws(4)

M3x28 Screws(2)

M3x20 Screws(2)

M3x8 Screws(4)

M3 Flange Nuts(4)

76 Rubber Pipes(4) (Big-12)

14 INSTALLATION OF BATTERY

M3x12 Self Tapping Screws(4)

M3x8 Self Tapping Screws(3)

M3x15 Screws(2)

82 Body Pin(1) (Big-12)

15 INSTALLATION OF MOTOR

M3x12 Self Tapping Screws(6)

M3x28 Screws(2)

M3 Washers(2)

M3x4 Set Screw(1)

64 Pinion Gear (15T)(1) (Blister)

16 INSTALATTION OF FRONT GUARD

M3x12 Self Tapping Screws(6)

17 INSTALLATION OF REAR GUARD

M3x55 Screw(1)

M3x12 Self Tapping Screws(8)

M3 Nut(1)

18 INSTALLATION OF 3 WAY REGISTER

M3x16 Screws(2)

M3x6 Screw(1)

M3 Nut(1)

Spacer(1)(Big-12)

19 INSTALLATION OF COVER

M3x12 Self Tapping Screws

M3x8 Scerws(3)

M3x16 Screw(1)

M3 Nuts(4)

76 Rubber Pipes(2) (L & S) (Big-12)

20 INSTALLATION OF TIRE

M3 x 8 Self Tapping Screws(16)

5ø Washers(6)

M4 Nylon Nuts(4)

60 Front Wheel Shfats(2) (Blister)

41 Wheel Shafts(4) (Big-11)

71 Wheel Hubs(4) (Big-12)

22 INSTALLATION OF TIRE

M3x8 Self Tapping Screws(5)

M3x8 Screws(4)

M3 Nuts(4)

M3 Washers(4)

23 INSTALLATION OF ACCESSORIES

M3 x 8 Self Tapping Screws(8)

8ø Retainer Washers(6)

M3 Washers(4)

25 APPLYING DECALS

82 Body Pins(4) (Big-12)

83 Hook Pins(4) (Big-12)

(1) INSTALLATION OF GEAR BOX

8ø Washer(1)

(Big-11)
(31) Idle Gear Shaft(1)

(Big-11)
(27) Diff. Joint Shaft(1)

(86) Idle Gear Shaft Pin(1) (Big-11)

(87) 4ø Metal(2) (Big-11)

2 ASSEMBLY OF GEAR BOX

8ø Washer(1)

M3 x 12 Self Tapping Screws(4)

(Big-11)
(32) Counter Gear Shaft(1)

3 ASSEMBLY OF SUSPENSION ARM

M4 x 10 Screw(1)

M2 x 6 Self Tapping Screw(16)

(62) 8ø Pillow Ball(8) (Blister)

(34) 8ø BAll Seats(8) (Big-11)

(30) 5ø Plastic Bearings(8) (Big-11)

4 ASSEMBLY OF MAIN FRAME

M4x16 Self Tapping Screw(1)

M3x12 Self Tapping Screw(18)

M3 x 8 Screw(2)

M3 Washer(4)

M3 Flange Nuts(2)

M4 Washer (1)

M3 Nut(2)

(63) 5.8ø Pillow Ball(2) (Blister)

(85) Pillow Ball Base(2) (Big-11)

(5) INSTALLATION OF SUS. ARM

M3x16 Self Tapping Screw(4)

(63) 5.8ø Pillow Ball (12) (Blister)

(35) Sus. Shaft A(6) (Big-11)

(36) Sus. Shaft B(2) (Blister)

(6) ASSEMBLY OF SPPED CONTROLLER

M3x12 Self Tapping Screw(2)

M3 x 8 Screw(2)

M3 Nut(3)

M2.6 Screw(1)

8ø Retainer Washer(1)

M3 Nuts(Gold Color) (2)

(55) Speed Controller Cord Red(1), White(1)(Big-12)

(42) 7.2V Connector(1)(Big-12)

(46) Speed Controller Pivot(1)(Big-12)

(49) Contact Point Holders(2)(Big-12)

(50) Contact Points(2) (Big-12)

(48) Speed Controller Stud(1)(Big-12)

(47) Speed Controller Spring(1)(Big-12)

(51) 4.5ø Pivot Ball(1) (Big-12)

(54) Rug Terminals(2) (Big-12)

8 ASSEMBLY OF SERVO

(51) 4.5ø Ball Ling(1)(Big-12)

(57) Speed Controller Rod(1) (Big-12)

(27) Double Sided Tape(1) 20x150 (Big-12)

(79) Nylon Strap(1) (Big-12)

9 ASSEMBLY OF STEERING SERVO

M3 Washer(2)

M3x8 Self Tapping Screw(1)

M3x12 Self Tapping Screw(2)

M3 Flange Nut(2)

M2x6 Self Tapping Screw(2)

M2x15 Screw(1)

Grommet(1)

M2 Nut(1)

10 MOUNTING OF RADIO

Grommet(1)

M3x12 Self Tapping Screws(5)

M3 x 8 Screws(2)

M3 Washers(2)

(77) Double Sided Tape(1) (1) (Big-12)

11 INSTALLATION OF TIE ROD

5ø Washers(2)

(61) Rear Wheel Shafts(2) (Blister)

(40) 5.8ø Ball Links(12) (Big-11)

(37) M3 rods A(4) (Big-11)

(38) M3 Rods B(2) (Big-11)

12 ASSEMBLY OF SHOCK

M2x6 Self Tapping Screws(8)

(78) Rubber Pipes(4) (Big-12)

(39) Shock Shafts(4)(Big-11)

(40) 5.8ø Ball Lings(4) (Big-11)

0 10 20 30 40 50 60 70 80 90 100 110 120 130 140 150 160 170 180mm

(Actual Size)

13 INSTALLATION OF SHOCK

M3 Washers(2)

M3 Nuts(4)

M3 Nylon Nuts(4)

M3x12 Self Tapping Screws(4)

M3x28 Screws(2)

M3x20 Screws(2)

M3x8 Screws(4)

M3 Flange Nuts(4)

76 Rubber Pipes(4) (Big-12)

14 INSTALLATION OF BATTERY

M3x12 Self Tapping Screws(4)

M3x8 Self Tapping Screws(3)

M3x15 Screws(2)

82 Body Pin(1) (Big-12)

15 INSTALLATION OF MOTOR

M3x12 Self Tapping Screws(6)

M3x28 Screws(2)

M3 Washers(2)

M3x4 Set Screw(1)

64 Pinion Gear (15T)(1) (Blister)

16 INSTALATTION OF FRONT GUARD

M3x12 Self Tapping Screws(6)

17 INSTALLATION OF REAR GUARD

M3x55 Screw(1)

M3x12 Self Tapping Screws(8)

M3 Nut(1)

18 INSTALLATION OF 3 WAY REGISTER

M3x16 Screws(2)

M3x6 Screw(1)

M3 Nut(1)

Spacer(1)(Big-12)

19 INSTALLATION OF COVER

M3x12 Self Tapping Screws

M3x8 Scerws(3)

M3x16 Screw(1)

M3 Nuts(4)

76 Rubber Pipes(2) (L & S) (Big-12)

20 INSTALLATION OF TIRE

M3 x 8 Self Tapping Screws(16)

5ø Washers(6)

M4 Nylon Nuts(4)

60 Front Wheel Shfats(2) (Blister)

41 Wheel Shafts(4) (Big-11)

71 Wheel Hubs(4) (Big-12)

22 INSTALLATION OF TIRE

M3x8 Self Tapping Screws(5)

M3x8 Screws(4)

M3 Nuts(4)

M3 Washers(4)

23 INSTALLATION OF ACCESSORIES

M3 x 8 Self Tapping Screws(8)

8ø Retainer Washers(6)

M3 Washers(4)

25 APPLYING DECALS

82 Body Pins(4) (Big-12)

83 Hook Pins(4) (Big-12)

SPARE PARTS LIST

Parts No.	Description	Includes These Key Numbers
BB- 1	Frame Set	1 x 1, 2 x 1
BB- 2	Bulk Head Gear Box Set	3 x 1, 4 x 1, 5 x 1, 6 x 1
BB- 3	Suspension Arm Set	7 x 1, 8 x 1, 9 x 2, 10 x 2, 30 x 4, 34 x 4, 62 x 4 85 x 2
BB- 4	Front Guard Set	11 x 1, 12 x 1, E x 1
BB- 5	Accessory Part	13 x 1, 14 x 2, 15 x 1, 16 x 2, 17 x 2, 18 x 1, 19 x 2, 20 x 1, 21 x 1, 22 x 4, 23 x 2, 72 x 2, 73 x 6, 74 x 1
BB- 6	Gear Set	24 x 1, 25 x 2, 26 x 3, 27 x 2, 28 x 1, 29 x 1
BB- 7	Shaft Set	31 x 1, 32 x 1, 33 x 1, 35 x 6, 36 x 2, 37 x 2, 38 x 2, 39 x 4, 41 x 4 60 x 2, 60 x 2, 60 x 2, 64 x 1, 75 x 2, 76 x 2
BB- 8	5.8ø Ball Link Set	40 x 12, 63 x 12, 87 x 2, 86 x 1
BB- 9	Cord Set	42 x 1, 44 x 1, 52 x 1, 55 x 2, 56 x 2 57 x 1, 77 x 1, 78 x 1, 79 x 1, 84 x 1
BB-10	Speed Controller Set	43 x 2, 45 x 1, 46 x 1, 47 x 1, 48 x 1, 49 x 2, 50 x 2, 51 x 1, 53 x 2, 54 x 1, 58 x 1, 65 x 1, Nut(Gold Color) x 2, M3 Nut x 1, 8ø Retainer Washer
BB-11	A, B Block Parts	A x 1, B x 1
BB-12	C Block Part	C x 1
BB-13	Tire Set	67 x 2, 68 x 2, 69 x 2, 70 x 2, 71 x 2
BB-14	Rear Wheel Shaft	61 x 2
BB-15	Body	66 x 1
BB-16	Decal	81 x 1
BB-17	Screw Set	80 Set
PI- 4	DZ Block Part	D x 1, Z x 1
1889	Body Pin	82 x 5
EP- 22	Hook Pin	83 x 5

** Optional Parts List **

1903	Ball Bearing (4ø x 8ø)	2 pcs. (Instead of D-3 & 4ø Metal)
1901	" (5ø x 10ø)	2 pcs. (Instead of 5ø Plastic Bearing)
PI-15	" (8ø x 12ø)	2 pcs. (Instead of D-4)
W-5002	Pressure Shock (L)	Constant Volume Type Shock x 2 set
W-5004	Adjustable Oil Shock	
1895	Racing Motor Le Mans 360PT	High Torque Type Motor w/bearing
1925	" 360 Gold	"
		End Bell (Metal)
OT--23	Pinion Gear (12T)	For high torque speed
OT-50	Pinion Gear (13T)	For high torque speed
OT-52	" (16T)	For high speed low torque